BAUMALIGHT™

Brush Mulcher iMP772

OPERATOR'S MANUAL

Issue Date: Feb 2020

TABLE OF CONTENTS

1 INTRODUCTION 1
1.1 Overview 1
1.2 Intended Use And Foreseeable Misuse 2
2 SAFETY 3
2.1 Safety Alert Symbol And Safety Words 3
2.2 Operational Hazards 4
Prepare For Emergencies 5
Replace Safety Signs 5
Do Not Allow Riders 5
Lower Operating Speed 5
Avoid Rollover 5
Avoid Powerlines & Underground Utilities 5
Detach Brush Mulcher Safely 6
Hazards From Modifying Equipment 6
2.3 Maintenance Hazards 7
3 SAFETY SIGNS 8
4 OPERATION 10
4.1 Preparation For Use 10
4.2 Driveline Dimension 10
4.3 Pre-Operation Check List 12
4.4 Machine Components 12
4.5 Attach Brush Mulcher 13
4.6 Detach Brush Mulcher 13
4.7 Transporting 14
4.8 Carbide Teeth Break-In 14
4.9 First Time User Tips 15
4.10 Field Operation 16
5 SERVICE AND MAINTENANCE 17
5.1 Maintenance 17
5.2 Inspections 17
5.3 Check Belt Tension 18
5.4 Replace Belt 19
5.5 Adjust Slip Clutch 20
5.6 Replace Cutting Teeth 20
5.7 Lubricate Rotor Bearings 21
5.8 Check Gearbox Oil Level 21
6 TROUBLESHOOTING 22
7 STORAGE 23
7.1 Storing Mulcher 23
7.2 Removing Mulcher From Storage 23
8 WARRANTY 24

1 INTRODUCTION

1.1 Overview

Congratulations on your choice of a Baumalight Brush Mulcher to complement your mulching operation. This equipment has been designed and manufactured to meet the needs of a discriminating buyer.

The cutting wheel is powered by the PTO on your tractor.

Replaceable bearings are provided at major pivot points for extended service life.

Safe, efficient and trouble free operation of your brush mulcher requires that you and anyone else who will be operating or maintaining the brush mulcher, read and understand the Safety, Operation, Maintenance and Troubleshooting information contained within the Operator's Manual.

This manual covers the Baumalight Brush Mulcher, models iMP772. Use the Table of Contents as a guide to locate required information.

Keep this manual handy for frequent reference and to pass on to new operators or owners. Call your Baumalight dealer, distributor or the factory if you need assistance, information or additional copies of the manuals.

When this machine is worn out and no longer in use, it should be returned to the retailer or other party for recycling.

OPERATOR ORIENTATION - The directions left, right, front and rear, as mentioned throughout this manual, are as seen from the tractor driver's seat and facing in the direction of travel.

1.2 Intended Use And Foreseeable Misuse

The brush mulcher is designed to be used by experienced operators, trained in the safe operation of a tractor and trained in the hazards related to using the brush mulcher and the safe use of the mulcher for the intended purpose. Operators will require personal protective equipment to reduce the risk from some hazards that cannot be completely eliminated or controlled by the design of the tool.

Care is required to ensure that the brush mulcher tool will not come across metallic objects, stones or other materials.

Brush mulcher tools are not designed for use in hazardous atmospheres where there is a risk of fire or explosion due to flammable gases or vapours. Use in hazardous, explosive atmospheres is prohibited.

Serious injury or death of the operator or bystanders may be caused if the tool is misused. Misuse may also cause damage to the machine carrying the implement.

2 SAFETY

2.1 Safety Alert Symbol And Safety Words

You must read, understand and follow the instructions given by the operating unit manufacturers, as well as the instructions in this manual.

The safety information in this manual is denoted by the safety alert symbol:

This symbol means ATTENTION! BECOME ALERT! YOUR SAFETY IS INVOLVED!

The level of risk is indicated by the following signal words:

⚠ DANGER

DANGER - Indicates a hazardous situation, which, if not avoided, WILL result in death or serious injury.

⚠ WARNING

WARNING - Indicates a hazardous situation, which, if not avoided, could result in death or serious injury.

⚠ CAUTION

CAUTION - Indicates a hazardous situation, which, if not avoided, could result in minor or moderate injury.

NOTICE

NOTICE - Indicates a situation that could result in damage to the equipment or other property.

2.2 Operational Hazards

⚠ WARNING

Prevent serious injury or death.

Read and understand this manual before operating brush mulcher.

Always stop engine and remove key before leaving operators seat.

Never allow anyone near the brush mulcher during operation.

Travel at a safe speed.

⚠ WARNING

Prevent serious injury or death from moving parts.

Moving parts can crush and dismember.

Do not operate without guards and shields in place.

Disconnect and lock out power source before adjusting or servicing.

⚠ WARNING

Use brush mulcher only for the designed applications.

Any other use may result in personal injury, damage to equipment and may void the warranty.

⚠ WARNING

Prevent serious injury or death.

Verify brush mulcher is attached to tractor before operation or transport.

⚠ WARNING

Protect from flying debris.

Wear proper safety glasses, goggles, or a face shield to protect from flying debris.

Carefully read all safety messages in this manual and on equipment safety signs. Keep safety signs in good condition and replace missing or damaged safety signs.

New equipment components and repair parts must include the current safety decal.

Learn how to properly operate equipment. NEVER operate or work around this equipment without proper instruction, while fatigued or under the influence of alcohol, prescription or non-prescription medication or if feeling ill.

Keep your equipment in proper working condition.

Know the regulations and laws that apply to you and your industry. This manual is not to replace any regulations or laws. Additional information may be found at: www.asae.org or www.osha.gov.

If you do not understand any part of this manual, contact Baumalight at 866-820-7603.

Prepare For Emergencies

- Be prepared in case of emergencies.
- Keep a fire extinguisher and first aid kit close to the machine.
- Keep emergency phone numbers close to your phone.
- Know your address so emergency services can locate you if an emergency arises.

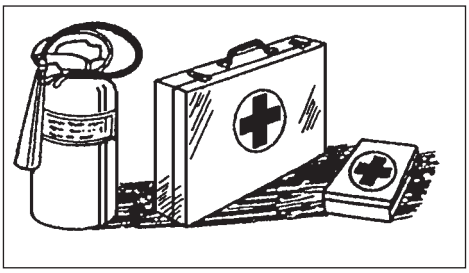

Replace Safety Signs

- Replace missing or damaged safety signs.
- Safety signs are identified in Section 3 of this manual.
- Replacement safety signs are available from your Baumalight dealer.

Do Not Allow Riders

- NEVER lift or carry anyone with brush mulcher.
- NEVER use brush mulcher as a work platform.
- NEVER allow passengers on brush mulcher.

Lower Operating Speed

- Lower operating speed while loading, unloading or performing heavy operations.
- Keep load low and move at slow speeds on rough or uneven terrain.

Avoid Rollover

The equipment may rollover, resulting in death or serious injury. To help prevent rollover:

- Travel at a slow speed.
- Avoid sharp turns & sudden movement on slopes.
- Carry loads close to the ground.
- Avoid holes, ditches and other obstructions which may cause equipment to rollover.
- Balance load so weight is evenly distributed and load is stable.
- Use caution when operating on slopes and do not operate on excessively steep slopes.
- Do not exceed load capacity of equipment.

Avoid Powerlines & Underground Utilities

⚠ DANGER

Prevent electrocution.

Death or serious injury can result if equipment comes near or contacts power lines.

Electrocution can occur without direct contact.

DO NOT leave the operator's seat if any part of the equipment contacts electric lines or cables.

Detach Brush Mulcher Safely

Detach brush mulcher on a firm and level surface. Brush mulcher may fall over if detached on sloping or soft surface. Be sure people, livestock and pets are clear of machinery.

Raised Attachment

⚠ WARNING

Crushing hazard.

Raised, unsupported brush mulcher can fall, resulting in death or serious injury.

Never enter the area under a raised brush mulcher.

A raised brush mulcher can lower unexpectedly, resulting in death or serious injury.

NEVER enter area under a raised brush mulcher.

Lower brush mulcher to ground, engage parking brake, shut off engine and remove key before servicing.

Avoid Loud Noise

⚠ WARNING

Prolonged exposure to loud noise can cause impairment or loss of hearing.

Wear a suitable hearing protective device such as earmuffs or earplugs to protect against objectionable or uncomfortable loud noises.

Hazards From Modifying Equipment

Do not make any alterations to your brush mulcher. Altering the equipment may cause unsafe conditions and may void the manufacturer's warranty.

Stay Clear Of Rotating Drive Lines

⚠ WARNING

Entanglement in a rotating drive line can cause serious injury or death.

Keep tractor shields and drive line shields in place at all times. DO NOT operate without drive line guards.

DO NOT wear loose fitting clothing.

Avoid Wood Dust Inhalation

⚠ WARNING

Wear an approved respirator (N95 Type as a minimum).

Follow local, state and federal regulations.

The health effects from exposure to wood dust are due to chemicals in the wood or chemical substances in the wood created by bacteria, fungi, or molds.

2.3 Maintenance Hazards

Maintenance

Before servicing, park machine on a firm and level surface, set parking brake, chock wheels, and place a “Do Not Operate” tag on control panel. Read and understand this manual. If you do not understand any part of the manual, contact Baumalight at 866-820-7603.

Always wear face and/or eye protection, safety shoes, and other protective equipment appropriate for the job.

Do not make unauthorized modifications. Contact Baumalight at 866-820-7603 before you weld, cut/drill holes, or make any other modifications.

Always use Baumalight replacement parts.

⚠ WARNING

Moving parts can crush and cut.

Keep clear of moving components.

Follow lockout procedure before servicing.

⚠ WARNING

Crushing hazard.

Before performing inspections, service or maintenance:

Park machine on firm, level surface.

Engage parking brake.

Turn engine off and remove key.

Place “Do Not Operate” tag on control panel.

⚠ WARNING

Entanglement hazard.

Keep clear of moving components.

Wear proper protective equipment appropriate for the job.

⚠ WARNING

Burn hazard.

Hot and high pressure hydraulic oil.

Allow oil to cool before servicing.

3 SAFETY SIGNS

Dashed line indicates item hidden from view unless cover is removed.

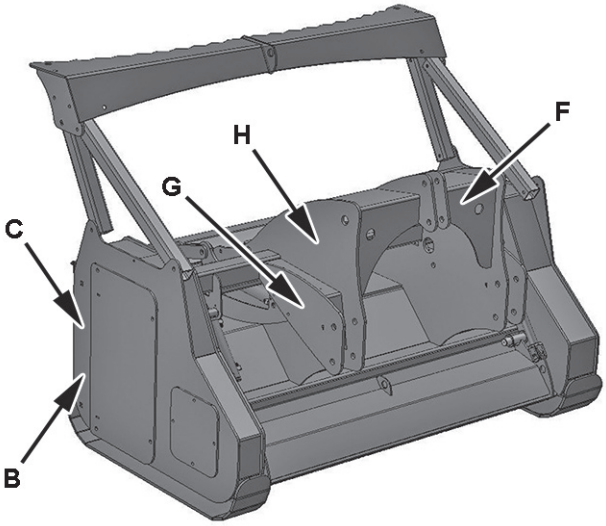

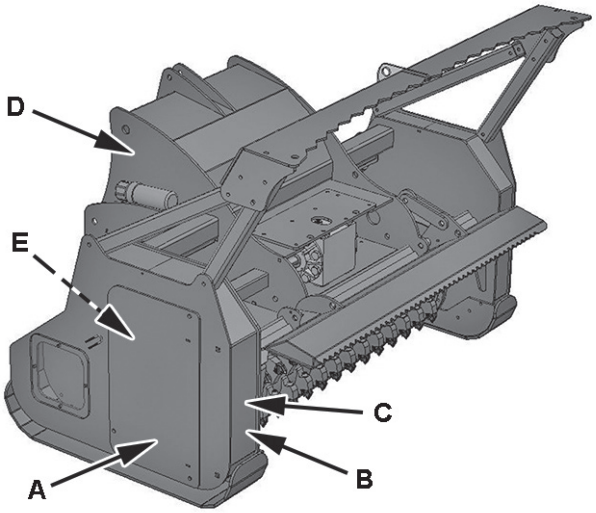

A. MTB-178 Safety Sign

B. MTB-176 Safety Sign

C. MTB-177 Safety Sign

D. MTB-175 Safety Sign

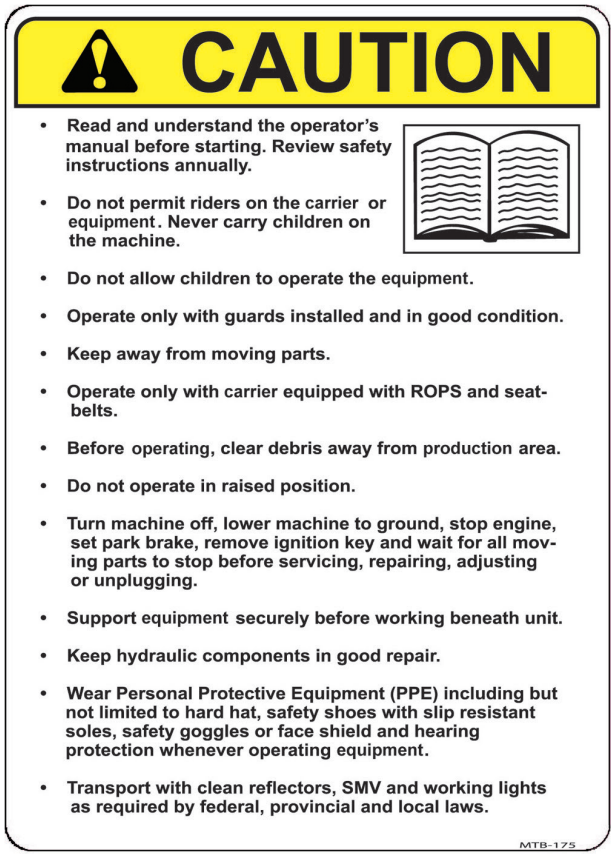

F. MTB Safety Sign

E. MTB-185 Safety Sign

G. MTB-180 Safety Sign

H. MTB-182 Safety Sign

4 OPERATION

4.1 Preparation For Use

⚠ WARNING

Wear an approved respirator (N95 Type as a minimum).

Follow local, state and federal regulations.

The health effects from exposure to wood dust are due to chemicals in the wood or chemical substances in the wood created by bacteria, fungi, or molds.

Although the brush mulcher has been carefully inspected and checked prior to shipment from manufacturer, it is recommended that the unit be thoroughly inspected.

Check all bolts for tightness and remove all shipping tags, bags, skids, and blocking.

Review and understand this manual and operating unit manual.

Remove any masking materials affixed during painting. Inspect the tractor and any accessory equipment to verify that nameplates and all safety warning, caution signs and decals provided with the equipment are in place and clearly visible.

Visually inspect the unit before each start up. Check for loose or missing parts and any damage that may have occurred during moving or shipping.

Review all tractor pre-start instructions, and be sure that all recommended steps and procedures have been followed.

Note: Always keep the weight of the machine in mind. Never position body in line of impact.

4.2 Driveline Dimension

A PTO driveline is supplied with the machine. To accompany the variety of 3 point hitch geometry available today, the driveline can be too long for most machines or too short for others. It is very important that the driveline be free to telescope but not to bottom out when going through its working range. If the driveline bottoms out, the bearings on both the machine and tractor PTO shaft will be overloaded and fail in a short time.

1. To determine the proper length of the driveline, follow this procedure:
   a. Clear the area of all bystanders.
   b. Attach brush mulcher to tractor (see section 4.5) but do not attach driveline.
   c. Raise mulcher until the input shaft is level with tractor PTO shaft.
   d. Measure dimension between locking grooves on tractor PTO shaft and machine input shaft.
   e. Measure the same dimensions on the compressed driveline.
   f. If compressed driveline dimension exceeds the machine dimension, driveline will have to be cut.
2. When cutting the driveline, follow this procedure:
   a. Subtract machine dimension (A) from uncut driveline dimension (B) or (B-A). This dimension determines how much too long the driveline is.
   b. Add another 1 inch (25 mm) to the dimension to be sure it doesn't bottom out, to determine (C) the cut off dimension.
   c. Use a hacksaw to cut dimension (C) from both ends. Cut both plastic tubes and metal cores.

d. Use a file to remove burrs from edges that were cut.

e. Assemble the 2 ends of the shaft.

f. Make sure shaft can telescope freely. If it does not, separate the 2 parts and inspect for burrs or cuttings on shaft ends. Be sure it telescopes freely before installing.

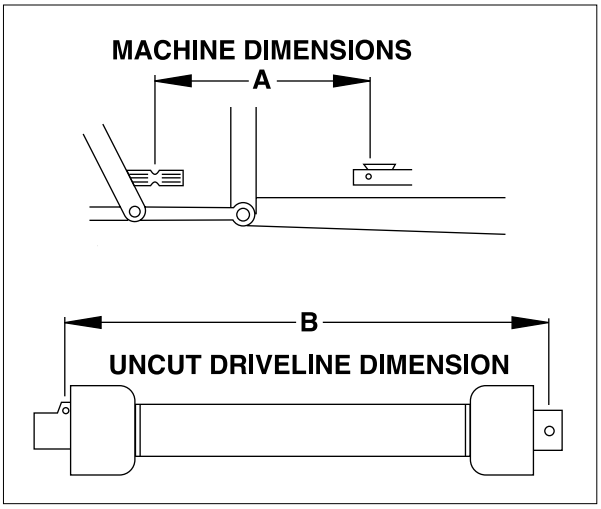

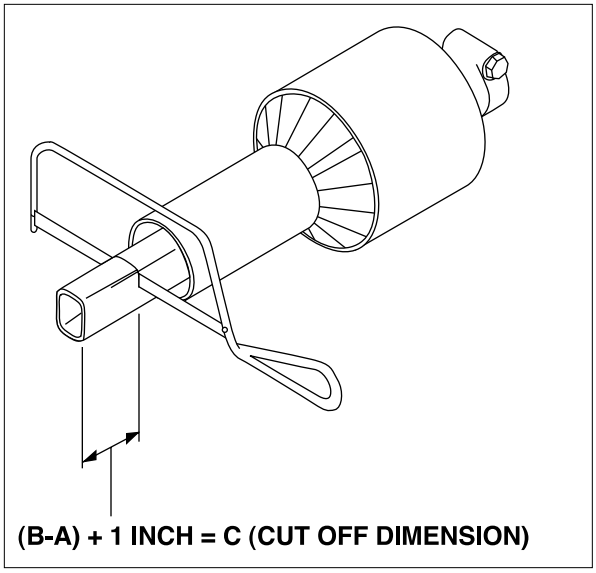

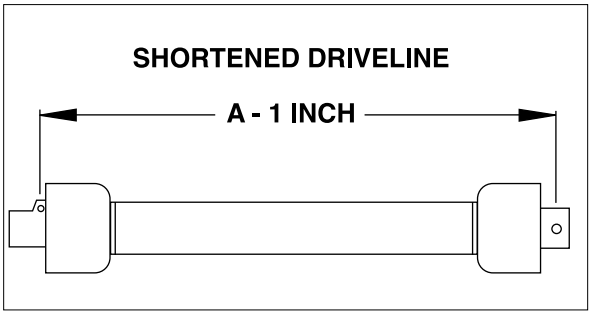

4.3 Pre-Operation Check List

Check-mark	Check these items:	Frequency
	Check the three linch pins on the hitch to verify they are securely fastened.	Each operation.
	Verify the pins on each end of the drive shaft are secured.	Each operation.
	Verify the safety chains on the drive shaft are securely attached to the cover.	Each operation.
	Verify the cutting tips on the rotor are tight.	Every 4 hours.
	Check belt chamber.	Every 4 hours.
	Check the oil in the brush mulcher's gearbox. For type and quantity refer to the maintenance section.	Every 200 hours.

4.4 Machine Components

A. Operators Manual Storage Tube

B. 3-Point Top Link

C. 3-Point Lift Points

D. Gear Box

E. Cutting Teeth

F. Rotor

G. Debris Guard Hydraulic Cylinder

H. Debris Guard

I. Cutting Shield

J. Brush Push Bar

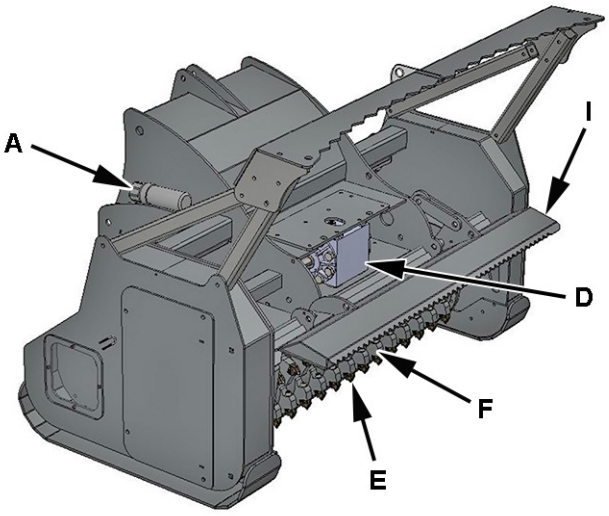

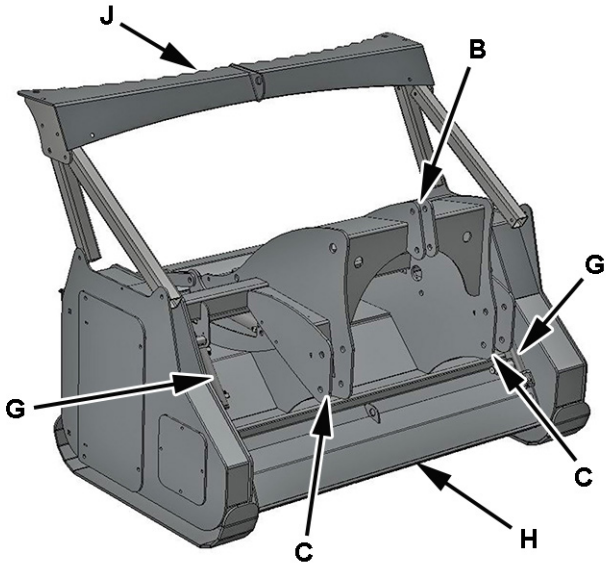

4.5 Attach Brush Mulcher

⚠ WARNING

To prevent injury or machine damage put transmission in "Park" and check the full range of hitch for interference, binding or PTO separation.

Never position yourself between tractor and brush mulcher.

Only experienced and properly trained operator's should operate the tractor and brush mulcher.

1. Back up tractor to brush mulcher with hitch points approximately in alignment.
2. Engage tractor park brake and/or place transmission in "Park".
3. Shut off engine and remove key.
4. Attach lower links to mulcher and retain using linch pins. To avoid machine damage, verify linch pins are locked on lower links.
5. Align top link with hole in top of frame and retain with pin and linch pin. Verify linch pin is locked on pin.
6. Pull PTO collar back toward the mulcher. Align splines on tractor PTO shaft and drive line by rotating mulcher drive line. Push drive line onto PTO shaft until it snaps into place.
7. Pull back on drive line to make sure it is locked on shaft.
8. Attach safety shield chain.
9. Adjust top link so that the brush mulcher lower frame is vertical to the ground.

4.6 Detach Brush Mulcher

⚠ WARNING

Prevent serious injury or death caused by unexpected movement:

1. **Park tractor on a level surface.**
2. **Engage tractor park brake.**
3. **Disengage PTO.**
4. **Shut off engine and remove key.**

1. Park tractor on a level surface.
2. Lower mulcher to the ground.
3. Shut off engine and remove key.
4. Disconnect drive line safety chain.
5. Support drive line with your hand.
6. Pull collar back toward mulcher and slide off shaft.
7. Remove linch pin and pin.
8. Place top link in storage position.
9. Remove linch pins and pins from both lower links.

4.7 Transporting

1. Verify all reflectors and Slow Moving Vehicle (SMV) sign are visible.
2. Raise brush mulcher to fully raised position.
3. Verify tractor PTO is disengaged.
4. Travel at a reaonable and safe speed.

⚠ WARNING

To prevent bodily injury from rotating cutting wheel, be sure to disengage PTO before transporting mulcher.

4.8 Carbide Teeth Break-In

During the first few hours of use, avoid hitting stones as much as possible to allow the carbide teeth (A) to wear slightly. This can be done by keeping the cutting wheel above ground level.

Brand new carbide tips are razor sharp and can chip and shatter easily when they hit hard objects. Once the razor sharpness has worn away, the tips do not chip as easily.

Observing these precautions will extend the life of the carbide teeth and reduce operating expenses.

The teeth bolts must be retighten every ten minutes for the first hour of use on a new mulcher.

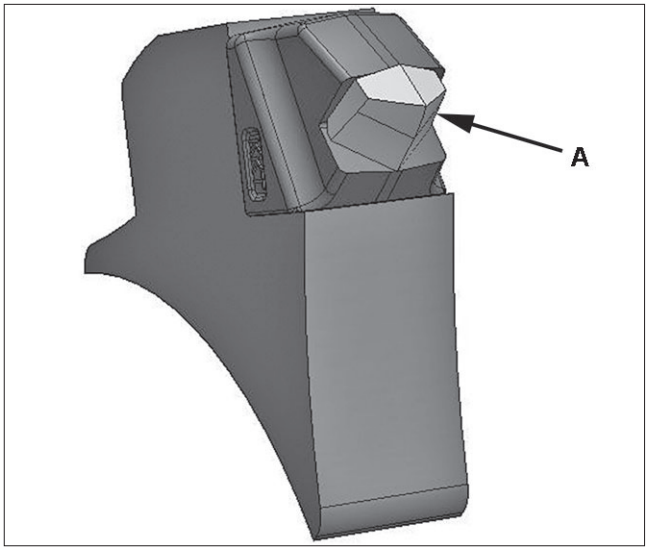

Ripper Tooth

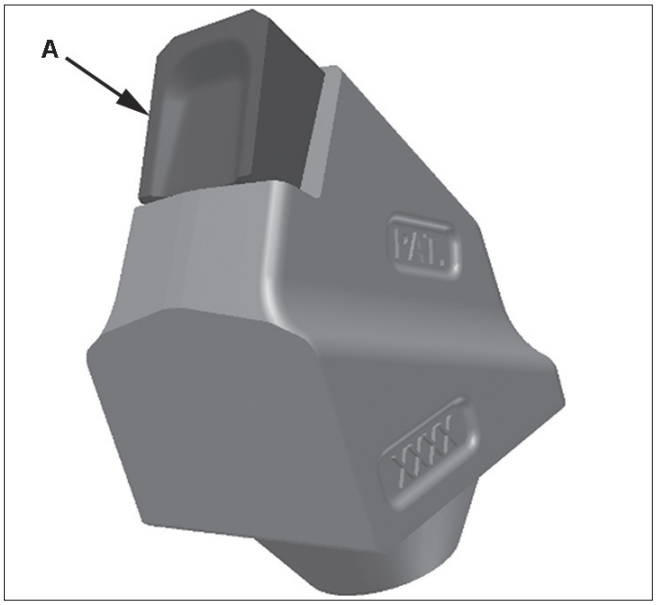

Planer Tooth

4.9 First Time User Tips

- First, operate all functions in a clear area with the tractor at idle speed to get a good feel for the controls before you actually move into any brush.
- Choose low density brush and move into it slowly, do not expect to get the first area done fast.
- Slow travel speed if pressure surges up close to max psi, doing this will greatly reduce rotor jambs, and with practice, will almost eliminate jambs.
- Run throttle only at half speed for starters, this will ensure that you do not activate the slip clutch.
- If the slip clutch does activate cool it to normal temperature before resuming operation (with water). A hot clutch will never grip and melts down fast.
- Operate with mulcher slightly raised until you have a better feel how much the unit can take.
- The machine is equipped with a push bar to push brush or small trees over and allow the mulcher teeth to contact the lower portion of the brush and mulch it or cut it off. The rest of the plant will be mulched as the machine moves through the working area.
- For tall brush, you can use the push bar to push the brush over and cut it off close to ground. You can also raise the mulcher, start mulching the top and then lower to the ground. Raise machine, move forward and repeat. Each operator must experiment to find a technique that works for them in their application.
- Although it is best to mulch when it is dry, the machine works well in wet conditions. However, you must travel slower to do the same quality mulching. It will also be necessary to clean the machine more frequently to prevent caking and clogging of the rotor area.

⚠ WARNING

Always turn off the tractor and disengage the PTO drive before getting off the seat and approaching the cutting wheel.

⚠ WARNING

Wear an approved respirator (N95 Type as a minimum).

Follow local, state and federal regulations.

The health effects from exposure to wood dust are due to chemicals in the wood or chemical substances in the wood created by bacteria, fungi, or molds.

4.10 Field Operation

⚠ WARNING

Entanglement in a rotating drive line can cause serious injury or death.

Keep tractor shields and drive line shields in place at all times. DO NOT operate without drive line guards.

DO NOT wear loose fitting clothing.

⚠ WARNING

Prevent serious injury or death caused by unexpected movement:

1. **Park tractor on a level surface.**
2. **Engage tractor park brake.**
3. **Disengage PTO.**
4. **Shut off engine and remove key.**

⚠ WARNING

Never operate brush mulcher when other people are in the vicinity.

Do not allow riders on tractor.

⚠ WARNING

Clean machine thoroughly before service or maintenance procedures.

The health effects from exposure to wood dust are due to chemicals in the wood or chemical substances in the wood created by bacteria, fungi, or molds.

⚠ WARNING

Never operate brush mulcher when other people are in the vicinity. Debris can be thrown several feet from cutting area. Keep all shields in place.

1. Attach brush mulcher to tractor. See Attach Brush Mulcher in this section.

⚠ WARNING

Prevent serious injury or death.

Operating unit must be equipped with a forestry guard to protect the operator.

2. Lower mulcher so skid plates are on ground.
3. Set engine speed to low idle and engage mulcher.
4. Slowly increase engine speed to high idle. Verify mulcher is operating smoothly and start travel.
5. If mulcher stalls, stop movement, slightly raise mulcher and allow rotor to regain speed. Slow ground speed to prevent further stalling.

⚠ WARNING

Moving parts can crush and cut.

Keep clear of moving components.

Lockout operating unit before clearing jams.

⚠ WARNING

Never approach brush mulcher before cutting wheel has come to a complete stop.

5 SERVICE And MAINTENANCE

5.1 Maintenance

Maintenance Chart		
General Inspection	Inspect the unit for any buildup of contamination (dirt, stones, etc.).	Daily
Cutting Teeth	Check and replace one at a time as necessary. With daily use expect to replace 4 to 6 teeth per day. See Replace Cutting Teeth in this section.	Every 4 hours.
Drive Belt	Check belt tension, alignment and inspect belt for wear or damage. Replace damaged or worn belt.	Every week.
Rotor Bearings	Check bearings for side-to-side and up/down movement. Replace bearings if movement is found.	Every week.
Rotor Bearings	Lubricate rotor bearings.	1 pump every 250 hours of use.
Gearbox Oil	Change gear box oil. Use synthetic 90W gear oil. Capacity is 1.5 qt (1.5 L).	Every 200 hours.

5.2 Inspections

⚠ WARNING

Prevent serious injury or death caused by unexpected movement:

1. **Park tractor on a level surface.**
2. **Engage tractor park brake.**
3. **Disengage PTO.**
4. **Shut off engine and remove key.**

⚠ WARNING

Clean machine thoroughly before service or maintenance procedures.

The health effects from exposure to wood dust are due to chemicals in the wood or chemical substances in the wood created by bacteria, fungi, or molds.

Inspect the unit for any buildup of contamination (dirt, stones, etc.).

Check cutting teeth every 4 hours of use. Keep cutting teeth in good condition. Unit will cut faster and remaining teeth will last longer if broken teeth are replaced.

5.3 Check Belt Tension

1. Lower mulcher to ground.
2. Set parking brake, stop engine and remove key.

⚠ WARNING

Moving parts can crush and cut.

Keep clear of moving components.

Follow lockout procedure before servicing.

3. Open inspection cover (A).

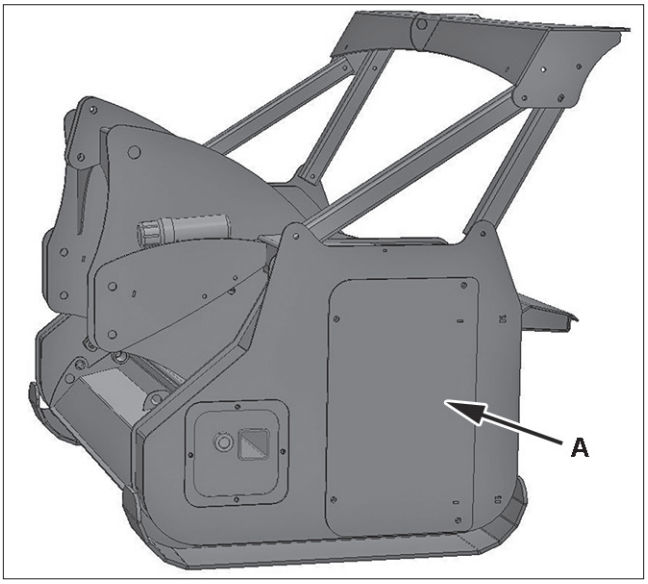

4. Inspect belt (B) for wear, damage, alignment and proper tension.
5. Adjust idler (C) to set belt tension.
6. Belt deflection (D) should be 0.5 in. (13 mm) at 3.0 lbs of force for a used belt or 4.25 lbs of force for a new belt.
7. Place a straight edge (E) on drive pulley and rotor pulley. Pulleys must be aligned or belt will wear quickly. Adjust pulleys if necessary.
8. Close inspection cover (A). Do not operate mulcher with cover (A) open or removed.

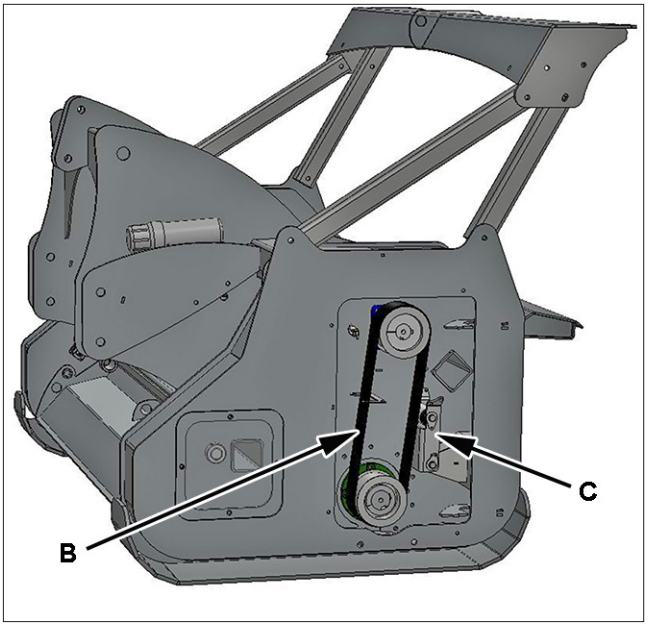

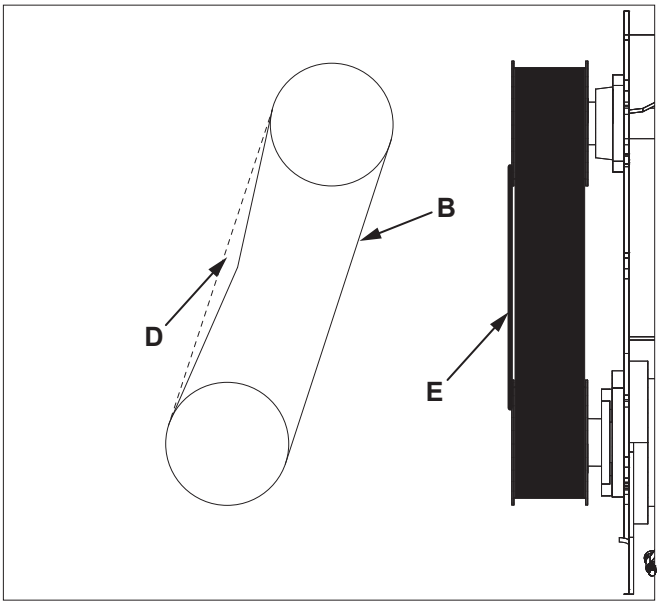

5.4 Replace Belt

1. Lower mulcher to ground.
2. Set parking brake, stop engine and remove key.

⚠ WARNING

Moving parts can crush and cut.

Keep clear of moving components.

Follow lockout procedure before servicing.

3. Open inspection cover (A).

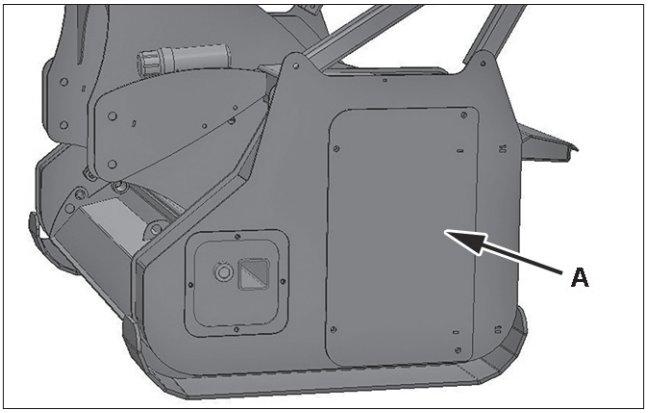

4. Loosen belt idler bracket.
5. Remove shaft pulley bolt (B) and washer (C).
6. Remove three hub bolts (D). Place hub bolts into threaded holes (E) in hub (F).
7. Evenly tighten bolts to push pulley (G) off of hub (F).
8. Remove hub (F), pulley (G) and belt (H). It may be necessary to lightly tap hub if hub stuck to shaft.
9. Install belt, pulley and hub onto shaft.
10. Install washer (C) and shaft bolt (B). Tighten bolt.
11. Align pulley holes with non threaded holes in hub (F) and install bolts (D).
12. Place a straight edge (I) on drive pulley and rotor pulley. Pulleys must be aligned or belt will wear quickly. Adjust pulley alignment as necessary and tighten bolts (D).
13. Belt deflection (J) should be 0.5 in. (13 mm) at 4.25 lbs of force.
14. Adjust tension and tighten belt idler bracket.
15. Close inspection cover (A). Do not operate mulcher with cover (A) open or removed.

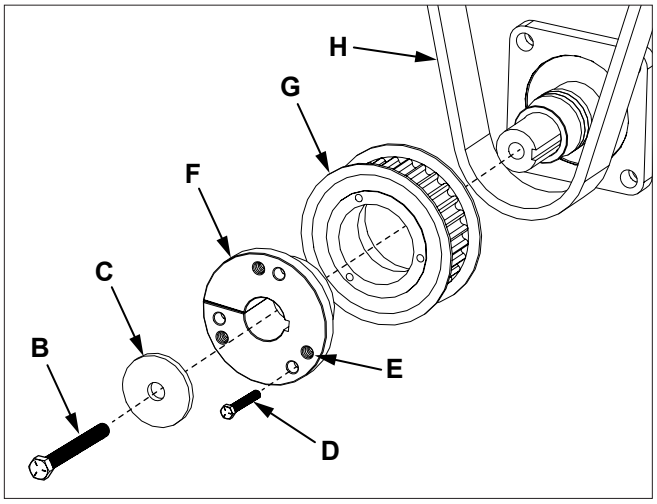

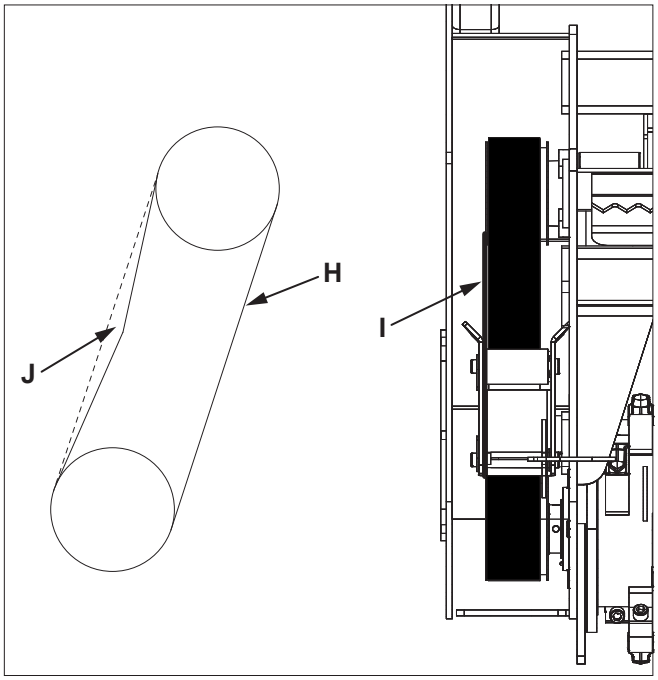

5.5 Adjust Slip Clutch

⚠ WARNING

Entanglement in a rotating drive line can cause serious injury or death.

Disconnect and lockout power source before adjusting or servicing.

⚠ CAUTION

Slip clutch may be hot. Wait for clutch to cool before adjusting or servicing.

Bondioli Driveshafts

4-Disk 120 Hp 1,000 rpm
- OEM Part Number
  - 71R8121UCKR80V6
- Dimension A - 0.236 in. (6 mm)
- Dimension B - 1.12 in. (28.5 mm)

4-Disk 165 Hp 1,000 rpm
- OEM Part Number
  - CSHN086U2R100W8
- Dimension A - 0.275 in. (7 mm)
- Dimension B - 1.14 in. (29 mm)

Binacchi Drivehafts

2-Disk 68 Hp 540 rpm
- OEM Part Number
  - B6140EA60255
  - B6N121USA60255
- Dimension A - 0.236 in. (6 mm)
- Dimension B - 1.1 in. (28 mm)

4-Disk 80 Hp 540 rpm
- OEM Part Number
  - B8N111USA60307
  - B8#140EA60307
- Dimension A - 0.275 in. (7 mm)
- Dimension B - 1.15 in. (29 mm)

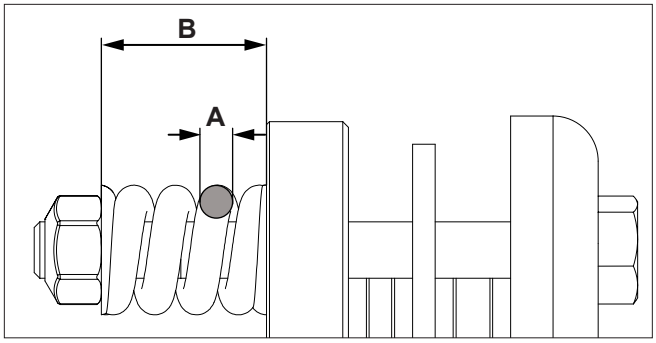

5.6 Replace Cutting Teeth

1. Park tractor and mulcher on a level surface.
2. Lower mulcher to the ground.
3. Shut off engine and remove key.
4. Inspect cutting teeth (A) for damage and wear. Replace individual teeth as needed.
5. Remove socket head cap screw (B) and tooth (A).
6. Install new tooth.
7. Tighten socket head cap screw (B) to 170 lb/ft (231 Nm) of torque.

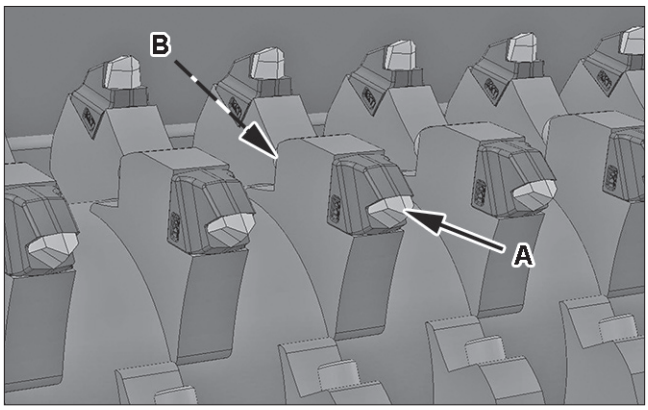

Note: Parts breakdown can be found on Baumalight's website. **www.baumalight.com**

5.7 Lubricate Rotor Bearings

The bearings are factory lubricated with a lithium or lithium complex base grease which is suitable for most applications. Select a grease that is compatible with a lithium or lithium complex grease.

The bearings should contain as much grease as speed will permit. A full bearing with consequent slight leakage through the seal is the best protection against contaminant entry.

Extreme situations may require a change in lubricating periods as dictated by experience.

Generally, a lower quantity of grease at frequent intervals is more effective than a greater quantity at extended lubrication intervals.

Typical lubrication quantity is 1 pump from a standard grease gun every 250 hours of use.

In the higher speed ranges too much grease will cause overheating. The amount of grease that the bearing will take for a particular high speed application can be determined only by experience. If excess grease in the bearing caused overheating, it will be necessary to remove grease fitting to permit excess grease to escape.

5.8 Check Gearbox Oil Level

1. Park tractor and mulcher on a level surface.
2. Lower mulcher to the ground.
3. Shut off engine and remove key.
4. Remove plug (A). Oil level should be 2 in. (51 mm) below plug hole. Bend a piece of wire and insert into hole. Remove wire to check oil level. Add oil if low.
5. Install plug.
6. To change gearbox oil, remove plug (B) to drain oil. Dispose of used oil in an environmentally safe manner. Install plug (B) and fill gearbox through hole (A) until oil is 2 in. (51 mm) below plug hole (A).

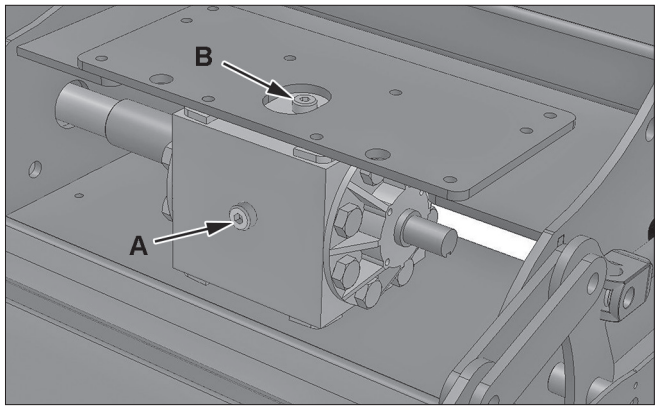

Note: Parts breakdown can be found on Baumalight's website. **www.baumalight.com**

6 TROUBLESHOOTING

PROBLEM	CHECK	SOLUTION
Rotor does not spin.	Rotor jammed.	Remove material from rotor.
	Verify PTO drive line is connected properly. Slip clutch is slipping.	Connect drive line to tractor. Remove material from rotor.
Rotor rotates slow or sluggish.	Drive belt loose. Slip clutch is slipping.	Tighten drive belt. 1. Check to determine if the slip clutch is hot. Use Caution: Clutch can be very hot! A hot clutch does NOT grip. 2. Slippage on the clutch occurs if there is more power than the unit is rated for: Model iMP772 is rated for 100-150 hp input. A bigger tractor can be used if it is idled down. This will decrease the output power of the engine. 3. Travel slower to decrease strain on clutch. Be careful when tightening the tension setting on the slip clutch as this could put excess strain on the gear box.
Tractor is not able to lift 3-point.	Tractor is too small.	Use proper size tractor.
Excessive vibration.	Cutting teeth worn or missing. Debris lodged in rotor.	Replace worn, broken or missing teeth. Remove debris.

7 STORAGE

7.1 Storing Mulcher

1. Store mulcher in a dry place.
2. Clean mulcher thoroughly. Dirt and wood chips will draw moisture and cause rust.
3. Check condition of cutting teeth. Replace as necessary. (See Service and Maintenance section.)
4. Check for loose or missing hardware.
5. Paint parts as necessary.
6. Store PTO drive line off the ground.
7. Refer to slip clutch manufacturers manual for storage procedures.

7.2 Removing Mulcher From Storage

1. Review Operator's manual and check adjustments.
2. Check gear box oil level. Add oil as necessary. (See Service and Maintenance section.)
3. If parts have been replaced, verify they run properly.
4. Refer to slip clutch manufacturers manual for startup procedures.

8 WARRANTY

This product is warranted to be free of defects in materials and workmanship under normal use and service, for a period of one year from the date of purchase, when operated and maintained in accordance with the Operating and Maintenance Instructions supplied with this unit. This warranty does not cover misuse or negligence.

Under no circumstances will the manufacturer be liable for any consequential damage or expense of any kind, including loss of profits. The manufacturer is under no circumstances liable for tractor damage of any kind. The manufacturer is not liable for the maintenance of the product.

This warranty is extended only to the original purchaser. Warranty is void if repairs are attempted by anyone other than an Authorized Service Center.

If a difficulty develops with the product, you should contact your nearest Authorized Repair Center, or distributor. Only these locations are authorized to make repairs to the product or affect the replacement of defective parts, which will be done at no charge within a reasonable time after the receipt of the product. Units or parts should be returned at the customer's expense to the nearest repair location or Authorized Service Center. Pack unit in a strong carton and pad tightly to avoid damage. Damage in-transit is not covered by warranty. Include original purchase receipt with any claim (keeping a copy for your files).

The Manufacturer's Liability is limited to repair of the product and/or replacement of parts and is given to the purchaser in lieu of all other remedies including incidental and consequential charges. There are no warranties, expressed or implied other than those specified herein. For the nearest Authorized Service Center call the manufacturer.

Please note the following details and file this information in an appropriate place.

Model Number: _____ S/N:_____

Date of Purchase: _____ Owner's Name_____

For parts, specifications and the latest machine information please visit our website.
www.baumalight.com

MTB MFG INC.
CORPORATE HEADQUARTERS
4575 Powell Rd.,
Wallenstein, Ontario Canada
N0B 2S0
Phone - 519.698.9864
Toll Free - 866.820.7603
Fax - 519.698.1087
www.baumalight.com