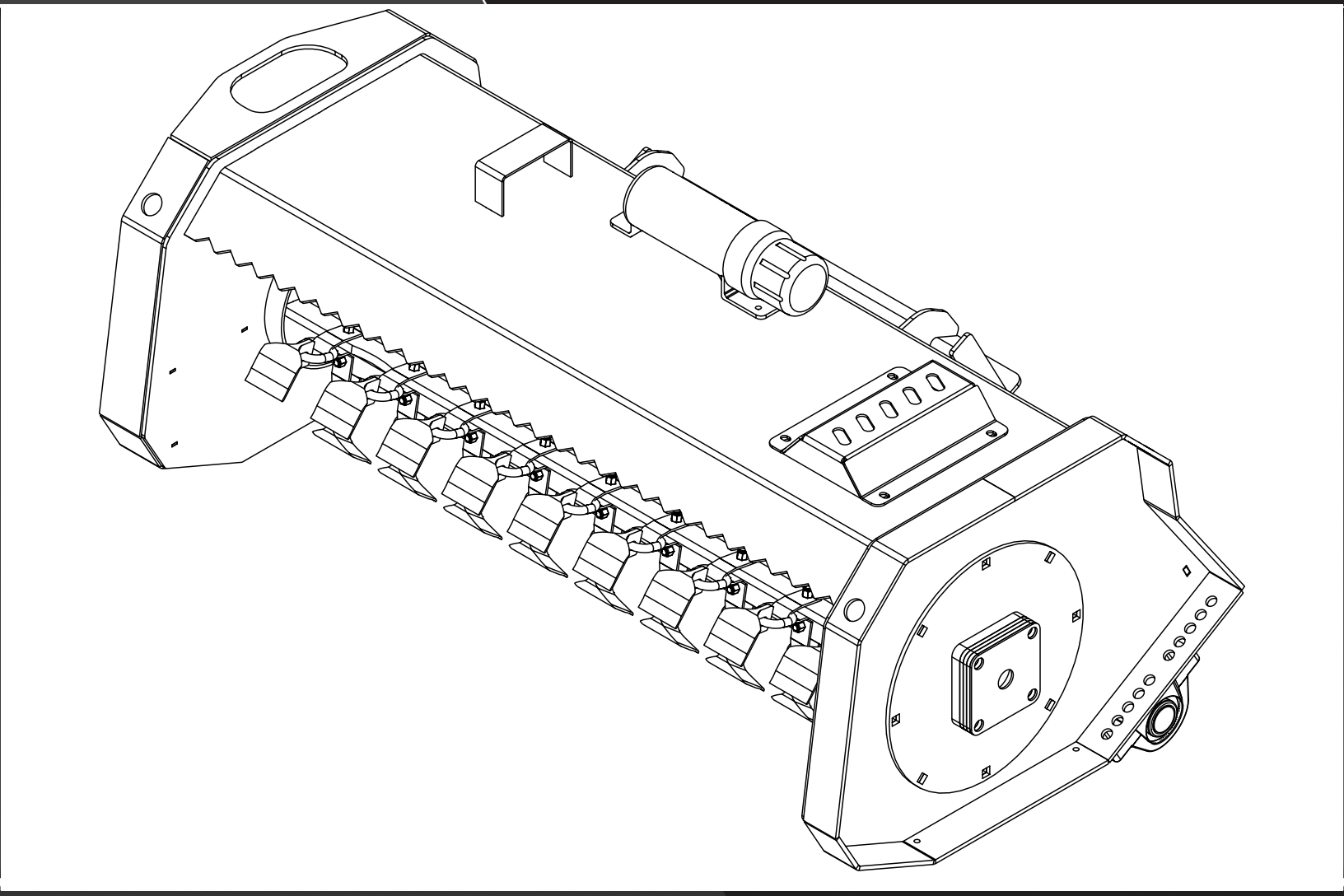

BAUMALIGHT™

FMM148 Flail Mower

OPERATOR'S MANUAL

Issue Date: June 2022

TABLE OF CONTENTS

1 INTRODUCTION 1
1.1 Overview 1
1.2 Intended Use And Foreseeable Misuse 2
2 SAFETY 3
2.1 Safety Alert Symbol And Safety Words 3
2.2 Operational Hazards 3
Prepare For Emergencies 4
Replace Safety Signs 4
Do Not Allow Riders 4
Lower Operating Speed 4
Avoid Rollover 5
Avoid Powerlines & Underground Utilities 5
Detach Flail Mower Safely 5
Hazards From Modifying Equipment 6
2.3 Maintenance Hazards 7
3 SAFETY SIGNS 8
4 OPERATION 10
4.1 Preparation For Use 10
4.2 Pre-Operation Check List 10
4.3 Electrical Connections (If Equipped) 10
4.4 Machine Components 11
4.5 Attach Flail Mower 12
4.6 Transporting 12
4.7 Detach Flail Mower 13
4.8 First Time User Tips 13
4.9 Field Operation 14
5 SERVICE AND MAINTENANCE 16
5.1 Maintenance 16
5.2 Inspections 16
5.3 Replace Cutting Teeth 17
5.4 Motor Shaft Seal 17
5.5 Lubricate Rotor Bearings 18
5.6 Zero Leak Case Drain Relief Valve 18
6 TROUBLESHOOTING 19
7 STORAGE 20
7.1 Storing 20
7.2 Remove From Storage 20
BAUMALIGHT ATTACHMENT WARRANTY 21

1 INTRODUCTION

1.1 Overview

Congratulations on your choice of a Baumalight Flail Mower. This equipment has been designed and manufactured to meet the needs of a discriminating buyer.

The cutting wheel is powered by the hydraulic system on your skid steer.

Replaceable bearings are provided at major pivot points for extended service life.

Safe, efficient and trouble free operation of your flail mower requires that you and anyone else who will be operating or maintaining the flail mower, read and understand the Safety, Operation, Maintenance and Troubleshooting information contained within the Operator's Manual.

This manual covers the Baumalight FMM148 Flail Mower. Use the Table of Contents as a guide to locate required information.

Keep this manual handy for frequent reference and to pass on to new operators or owners. Call your Baumalight dealer, distributor or the factory if you need assistance, information or additional copies of the manuals.

When this machine is worn out and no longer in use, it should be returned to the retailer or other party for recycling.

OPERATOR ORIENTATION - The directions left, right, front and rear, as mentioned throughout this manual, are as seen from the operator's seat and facing in the direction of travel.

1.2 Intended Use And Foreseeable Misuse

The flail mower is designed to be used by experienced operators, trained in the safe operation of a skid steer and trained in the hazards related to using the flail mower and the safe use of the flail mower for the intended purpose. Operators will require personal protective equipment to reduce the risk from some hazards that cannot be completely eliminated or controlled by the design of the tool.

Care is required to ensure that the flail mower will not come across metallic objects, stones or other materials.

Flail mower tools are not designed for use in hazardous atmospheres where there is a risk of fire or explosion due to flammable gases or vapours. Use in hazardous, explosive atmospheres is prohibited.

Serious injury or death of the operator or bystanders may be caused if the tool is misused. Misuse may also cause damage to the machine carrying the implement.

2 SAFETY

2.1 Safety Alert Symbol And Safety Words

You must read, understand and follow the instructions given by the operating unit manufacturers, as well as the instructions in this manual.

The safety information in this manual is denoted by the safety alert symbol:



This symbol means ATTENTION! BECOME ALERT! YOUR SAFETY IS INVOLVED!

The level of risk is indicated by the following signal words:

DANGER

DANGER - Indicates a hazardous situation, which, if not avoided, WILL result in death or serious injury.

WARNING

WARNING - Indicates a hazardous situation, which, if not avoided, could result in death or serious injury.

CAUTION

CAUTION - Indicates a hazardous situation, which, if not avoided, could result in minor or moderate injury.

NOTICE

NOTICE - Indicates a situation that could result in damage to the equipment or other property.

2.2 Operational Hazards

WARNING

Prevent serious injury or death.

Read and understand this manual before operating the flail mower.

Always stop engine and remove key before leaving operators seat.

Never allow anyone near the flail mower during operation.

Travel at a safe speed.

WARNING

Prevent serious injury or death from moving parts.

Moving parts can crush and dismember.

Do not operate without guards and shields in place.

Disconnect and lock out power source before adjusting or servicing.

WARNING

Use flail mower only for the designed applications.

Any other use may result in personal injury, damage to equipment and may void the warranty.

⚠ WARNING

Prevent serious injury or death.

Verify flail mower is attached to skid steer before operation or transport.

⚠ WARNING

Protect from flying debris.

Wear proper safety glasses, goggles, or a face shield to protect from flying debris.

Carefully read all safety messages in this manual and on equipment safety signs. Keep safety signs in good condition and replace missing or damaged safety signs.

New equipment components and repair parts must include the current safety decal.

Learn how to properly operate equipment. NEVER operate or work around this equipment without proper instruction, while fatigued or under the influence of alcohol, prescription or non-prescription medication or if feeling ill.

Keep your equipment in proper working condition.

Know the regulations and laws that apply to you and your industry. This manual is not to replace any regulations or laws. Additional information may be found at: www.asae.org or www.osha.gov.

If you do not understand any part of this manual, contact Baumalight.

Prepare For Emergencies

- Be prepared in case of emergencies.
- Keep a fire extinguisher and first aid kit close to the machine.
- Keep emergency phone numbers close to your phone.
- Know your address so emergency services can locate you if an emergency arises.

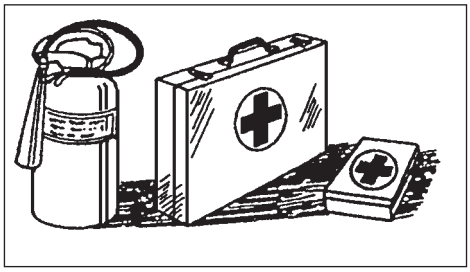

Replace Safety Signs

- Replace missing or damaged safety signs.
- Safety signs are identified in Section 3 of this manual.
- Replacement safety signs are available from your Baumalight dealer.

Do Not Allow Riders

- NEVER lift or carry anyone with flail mower.
- NEVER use flail mower as a work platform.
- NEVER allow passengers on flail mower.

Lower Operating Speed

- Lower operating speed while loading, unloading or performing heavy operations.
- Keep load low and move at slow speeds on rough or uneven terrain.

Avoid Rollover

The equipment may rollover, resulting in death or serious injury. To help prevent rollover:

- Travel at a slow speed.
- Avoid sharp turns & sudden movement on slopes.
- Carry loads close to the ground.
- Avoid holes, ditches and other obstructions which may cause equipment to rollover.
- Balance load so weight is evenly distributed and load is stable.
- Use caution when operating on slopes and do not operate on excessively steep slopes.
- Do not exceed load capacity of equipment.

Avoid Powerlines & Underground Utilities

⚠ DANGER

Prevent electrocution.

Death or serious injury can result if equipment comes near or contacts power lines.

Electrocution can occur without direct contact.

DO NOT leave the operator's seat if any part of the equipment contacts electric lines or cables.

Detach Flail Mower Safely

Detach flail mower on a firm and level surface. Flail mower may fall over if detached on sloping or soft surface. Be sure people, livestock and pets are clear of machinery.

Relieve hydraulic pressure before disconnecting hydraulic hoses. See your skid steer Operator's Manual.

Raised Attachment

⚠ WARNING

Crushing hazard.

Raised, unsupported flail mower can fall, resulting in death or serious injury.

Never enter the area under a raised flail mower.

A raised flail mower can lower unexpectedly, resulting in death or serious injury.

NEVER enter area under a raised flail mower.

Lower flail mower to ground, engage parking brake, shut off engine and remove key before servicing.

Avoid Loud Noise

⚠ WARNING

Prolonged exposure to loud noise can cause impairment or loss of hearing.

Wear a suitable hearing protective device such as earmuffs or earplugs to protect against objectionable or uncomfortable loud noises.

Hazards From Modifying Equipment

Do not make any alterations to your flail mower. Altering the equipment may cause unsafe conditions and may void the manufacturer's warranty.

Avoid High Pressure Fluids

⚠ WARNING

Pressurized fluids can penetrate the skin.

Hydraulic hoses can fail from age, damage and exposure.

Use body and face protection while searching for leaks. A tiny, almost invisible leak can penetrate the skin, thereby requiring immediate medical attention.

Use wood or cardboard to detect hydraulic leaks, never use your hands.

Escaping fluid under pressure can penetrate the skin causing serious injury.

Prevent the hazard by relieving pressure (See skid steer Operator's Manual) before connecting or disconnecting hydraulic hoses. Verify all connections are tight before applying pressure.

Search for leaks with a piece of cardboard or wood. Protect hands and body from high pressure fluids. If an accident occurs, see a doctor immediately. Any fluid injected into the skin must be surgically removed within a few hours or serious infection may result.

Avoid Wood Dust Inhalation

⚠ WARNING

Drilling, sawing, sanding or machining wood products can expose you to wood dust, a substance known to the State of California to cause cancer.

Avoid inhaling wood dust or use a dust mask or other safeguards for personal protection. For more information go to www.P65Warnings.ca.gov/wood.

⚠ WARNING

Wear an approved dust mask or respirator.

Follow local, state and federal regulations.

2.3 Maintenance Hazards

Before servicing, park machine on a firm and level surface, set parking brake, chock wheels, and place a “Do Not Operate” tag on control panel. Read and understand this manual. If you do not understand any part of the manual, contact Baumalight.

Always wear face and/or eye protection, safety shoes, and other protective equipment appropriate for the job.

Do not make unauthorized modifications. Contact Baumalight before you weld, cut/drill holes, or make any other modifications.

Always use Baumalight replacement parts.

WARNING

Moving parts can crush and cut.

Keep clear of moving components.

Follow lockout procedure before servicing.

WARNING

Crushing hazard.

Before performing inspections, service or maintenance:

- **Park machine on firm, level surface.**
- **Engage parking brake.**
- **Turn engine off and remove key.**
- **Place “Do Not Operate” tag on control panel.**

WARNING

Entanglement hazard.

Keep clear of moving components.

Wear proper protective equipment appropriate for the job.

WARNING

Burn hazard.

Hot and high pressure hydraulic oil.

Allow oil to cool before servicing.

WARNING

Drilling, sawing, sanding or machining wood products can expose you to wood dust, a substance known to the State of California to cause cancer.

Avoid inhaling wood dust or use a dust mask or other safeguards for personal protection. For more information go to www.P65Warnings.ca.gov/wood.

WARNING

Wear an approved dust mask or respirator.

Follow local, state and federal regulations.

3 SAFETY SIGNS

The two and four panel safety decals are pictorial and have a yellow background. The panel with a triangle indicates the potential hazard. The panel without a triangle indicates how to avoid the hazard.

If any of the decals are missing, are damaged, or if you do not understand the decal, please contact your dealer.

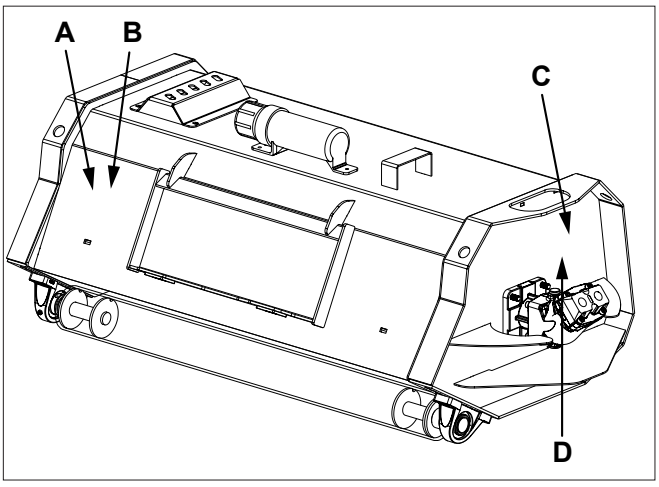

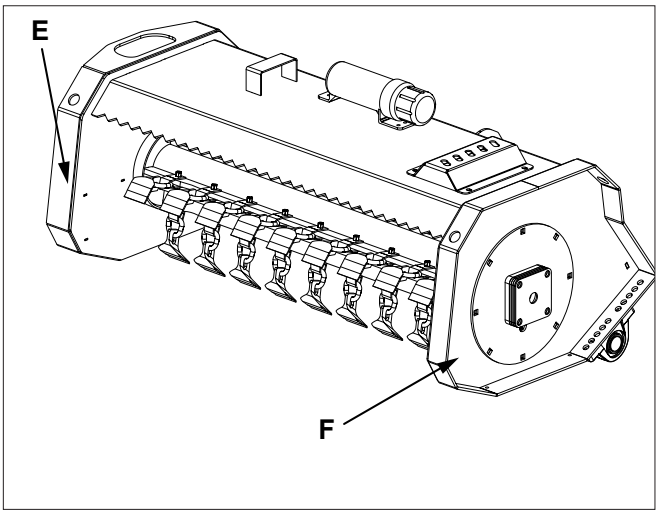

A. D005125 ⚠ WARNING - Read and understand safety signs on the machine and operating instructions in this manual before operating machine.

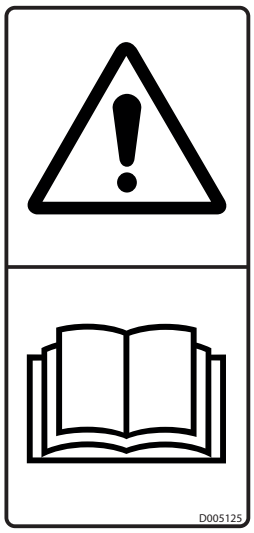

B. D005517 ⚠ WARNING - Remove key before servicing.

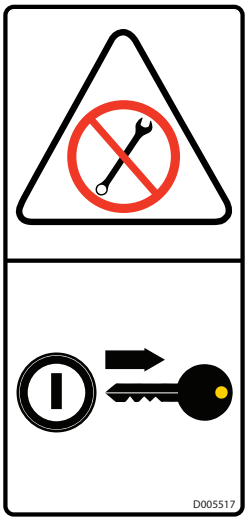

C. D005262 ⚠ WARNING - P65 warning information.

WARNING: This product can expose you to chemicals including 1,3-Butadiene and lead, which are known to the state of California to cause cancer and birth defects or other reproductive harm. For more information go to www.P65Warnings.ca.gov.

D005262

D. D005126 ⚠ WARNING - Pressurized fluid hazard. Pressurized fluids can penetrate the skin. Do not check for leaks with your hands. Keep back a safe distance when pressurized



E. D005364

F. D005223

⚠ WARNING - Rotating blade hazard. Keep back 75 m while machine is operating. Wait for blade to stop before approaching machine.



4 OPERATION

4.1 Preparation For Use

⚠ WARNING

Drilling, sawing, sanding or machining wood products can expose you to wood dust, a substance known to the State of California to cause cancer.

Avoid inhaling wood dust or use a dust mask or other safeguards for personal protection. For more information go to www.P65Warnings.ca.gov/wood.

⚠ WARNING

Wear an approved dust mask or respirator.

Follow local, state and federal regulations.

Although the flail mower has been carefully inspected and checked prior to shipment from manufacturer, it is recommended that the unit be thoroughly inspected.

Check all bolts for tightness and remove all shipping tags, bags, skids, and blocking.

Review and understand this manual and operating unit manual.

Remove any masking materials affixed during painting. Inspect the skid steer and any accessory equipment to verify that nameplates and all safety warning, caution signs and decals provided with the equipment are in place and clearly visible.

Visually inspect the unit before each start up. Check for loose or missing parts and any damage that may have occurred during moving or shipping.

Review all skid steer pre-start instructions, and be sure that all recommended steps and procedures have been followed.

Note: Always keep the weight of the machine in mind. Never position body in line of impact.

4.2 Pre-Operation Check List

- Verify that flail mower is properly attached to skid steer.
- Verify that hydraulic hoses and electrical cable (if equipped) are properly connected.
- It is operators responsibility to perform the following checks prior to operation of equipment.
  - Review and understand this manual and operating unit manual.
  - Verify safety decals are installed and legible. Replace if damaged or missing.
  - Verify that all hardware is tight.
  - Inspect hoses and fittings for wear, damage and leaks. Replace damaged or leaking hoses before use.
  - Verify that local utilities have marked all underground wires, cables and pipelines.
  - Refer to operating unit operator's manual for prestarting instructions.

4.3 Electrical Connections (If Equipped)

1. Connect electrical harness to connector on tree spade.

4.4 Machine Components

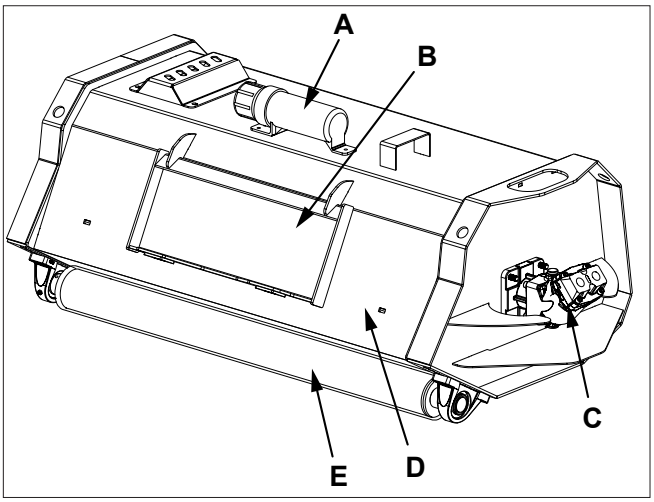

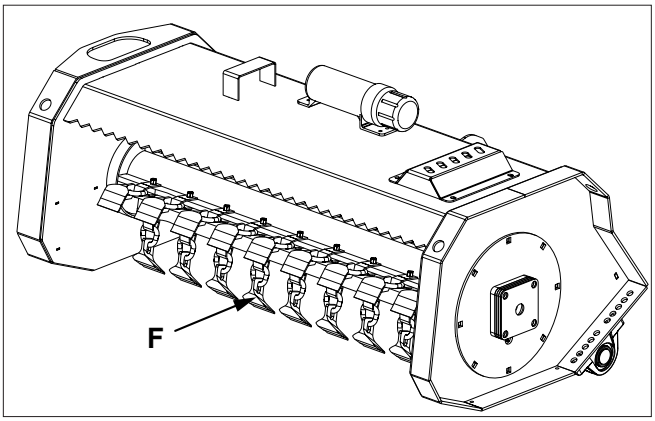

A. Operators Manual Storage Tube
B. Quick Attach
C. Motor
D. Debris Guard
E. Depth Roller
F. Cutting Teeth

4.5 Attach Flail Mower

⚠ WARNING

To prevent injury or machine damage put transmission in park.

Never position yourself between skid steer and flail mower.

Only experienced and properly trained operator's should operate the skid steer and flail mower.

Note: *Use this procedure to connect to skid steer after the initial setup has been performed.*

1. Read and follow all safety instructions.
2. Attach flail mower to skid steer. See Operator's Manual.
3. Verify pins are secure in the correct position.
4. Connect hydraulic hoses. Verify hydraulic hoses are clear of pinch areas and moving parts.
5. Move to a clear open area to test functions.

⚠ WARNING

Prevent serious injury.

Verify bystanders are away and operator is in a safe area to avoid pinching/ crushing.

Mower may move erratically due to air in the hydraulic system.

⚠ WARNING

Pressurized fluids can penetrate the skin.

Use body and face protection while searching for leaks. A tiny, almost invisible leak can penetrate the skin, thereby requiring immediate medical attention.

Use wood or cardboard to detect hydraulic leaks, never use your hands.

6. Start skid steer and operate all functions to fill cylinders with oil. Flail mower may function erratically until all air is purged from hydraulic system.
7. Check operation and verify there are no leaks.
8. Stop skid steer engine and check hydraulic oil reservoir level. Add hydraulic oil if necessary. Refer to your skid steer operators manual for hydraulic oil specification.

4.6 Transporting

1. Verify all reflectors and Slow Moving Vehicle (SMV) sign are visible.
2. Raise flail mower slightly off ground.
3. Verify hydraulics are disengaged.
4. Travel at a reasonable and safe speed.

4.7 Detach Flail Mower

WARNING

Prevent serious injury or death caused by unexpected movement:

1. **Park machine on a level surface.**
2. **Engage parking brake.**
3. **Disconnect hydraulic drive.**
4. **Shut off engine and remove key.**

1. Park on a level surface.
2. Lower flail mower to the ground.
3. Shut off engine and remove key.
4. Disconnect hydraulic hoses and electrical harness (if equipped).
5. Detach flail mower from skid steer. See Operator's Manual.

4.8 First Time User Tips

- First, operate all functions in a clear area with throttle at low speed to get a good feel for the controls before you actually move into any brush.
- Choose low density brush and move into it slowly, do not expect to get the first area done fast.
- Slow travel speed if pressure surges up close to max psi. Doing this will greatly reduce jambs, and with practice, will almost eliminate jambs.
- Operate with flail mower slightly raised until you have a better feel how much the unit can take.
- Start mulching the top and then lower to the ground. Raise machine, move forward and repeat. Each operator must experiment to find a technique that works for them in their application.
- Although it is best to mulch when it is dry, the machine works well in wet conditions. However, you must travel slower to do the same quality mulching. It will also be necessary to clean the machine more frequently to prevent caking and clogging of the rotor area.

WARNING

Always shut off engine before getting off the seat.

WARNING

Drilling, sawing, sanding or machining wood products can expose you to wood dust, a substance known to the State of California to cause cancer.

Avoid inhaling wood dust or use a dust mask or other safeguards for personal protection. For more information go to www.P65Warnings.ca.gov/wood.

WARNING

Wear an approved dust mask or respirator.

Follow local, state and federal regulations.

4.9 Field Operation

WARNING

Prevent serious injury or death caused by unexpected movement:

1. **Park machine on firm, level surface.**
2. **Engage parking brake.**
3. **Disconnect hydraulic drive.**
4. **Shut off engine and remove key.**

WARNING

Never operate flail mower when other people are in the vicinity. Debris can be thrown several feet from cutting area.

Keep all shields in place.

Do not allow riders on skid steer.

WARNING

Clean machine thoroughly before service or maintenance procedures.

The health effects from exposure to wood dust are due to chemicals in the wood or chemical substances in the wood created by bacteria, fungi, or molds.

WARNING

Prevent serious injury or death.

Operating unit must be equipped with a forestry guard to protect the operator.

1. Attach flail mower to skid steer. See Attach Flail Mower in this section.

WARNING

Drilling, sawing, sanding or machining wood products can expose you to wood dust, a substance known to the State of California to cause cancer.

Avoid inhaling wood dust or use a dust mask or other safeguards for personal protection. For more information go to www.P65Warnings.ca.gov/wood.

WARNING

Wear an approved dust mask or respirator.

Follow local, state and federal regulations.

2. Lower flail mower so skid plates are on ground.
3. Set engine speed to low idle and engage flail mower.
4. Slowly increase engine speed to high idle and engage hydraulics. Verify flail mower is operating smoothly and start travel.
5. If flail mower stalls, stop movement, slightly raise flail mower and allow rotor to regain speed. Slow ground speed to prevent further stalling.

WARNING

Moving parts can crush and cut.

Keep clear of moving components.

Lockout operating unit before clearing jams.

WARNING

Never approach flail mower before rotor has come to a complete stop.

5 SERVICE AND MAINTENANCE

5.1 Maintenance

Maintenance Chart		
General Inspection	Inspect the unit for any buildup of contamination (dirt, stones, etc.).	Daily
Hydraulic Hoses and Fittings	Inspect for damage or wear. Replace damaged or worn hoses and fittings.	Daily
Cutting Teeth	Check and replace one at a time as necessary. With daily use expect to replace 4 to 6 teeth per day. See Replace Cutting Teeth in this section.	Every 4 hours.
Rotor Bearings	Check bearings for side-to-side and up/down movement. Replace bearings if movement is found.	Every Week.
Rotor And Depth Roller Bearings	Lubricate bearings.	1 pump every 250 hours of use.

5.2 Inspections

WARNING

Prevent serious injury or death caused by unexpected movement:

1. **Park machine on a level surface.**
2. **Engage parking brake.**
3. **Disconnect hydraulic drive.**
4. **Shut off engine and remove key.**

WARNING

Clean machine thoroughly before service or maintenance procedures.

The health effects from exposure to wood dust are due to chemicals in the wood or chemical substances in the wood created by bacteria, fungi, or molds.

WARNING

Drilling, sawing, sanding or machining wood products can expose you to wood dust, a substance known to the State of California to cause cancer.

Avoid inhaling wood dust or use a dust mask or other safeguards for personal protection. For more information go to www.P65Warnings.ca.gov/wood.

WARNING

Wear an approved dust mask or respirator.

Follow local, state and federal regulations.

Inspect the unit for any buildup of contamination (dirt, stones, etc.).

Check cutting teeth every 4 hours of use. Keep cutting teeth in good condition. Unit will cut faster and remaining teeth will last longer if broken teeth are replaced.

5.3 Replace Cutting Teeth

1. Park skid steer and flail mower on a level surface.
2. Lower flail mower to the ground.
3. Shut off engine and remove key.
4. Inspect teeth for wear on flat edge.
5. Remove bolt (A), mounting strap, slotted D ring (B) and tooth (C)
6. Remove tooth (C) from slotted D ring (B).
7. Install new tooth on D ring.
8. Install tooth, D ring, mounting strap and bolt (A). Tighten bolt.
9. Rotate D ring so slot is under mounting strap.

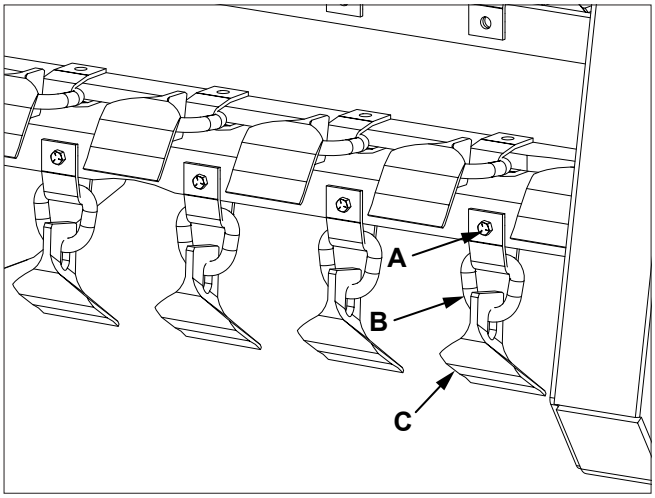

Note: *Parts breakdown can be found on Baumalight's website.* www.baumalight.com

5.4 Motor Shaft Seal

To prevent hydraulic motor damage, the motor shaft seal is designed to fail if case pressure exceeds 100 psi (689 kPa).

The motor shaft seal (A) has failed, verify case drain line is free flow to sump or reservoir. Also check drain line for blockage. Correct any problems before replacing shaft seal.

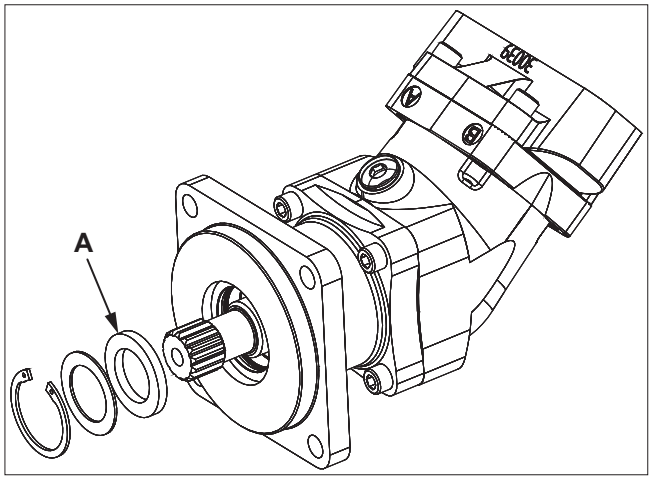

Order replacement seal kit from Baumalight and follow instructions provided with kit.

Motor Shaft Seal Replacement manual can be found at www.baumalight.com/support.

Note: *Parts breakdown can be found on Baumalight's website.* www.baumalight.com

5.5 Lubricate Rotor Bearings

The bearings are factory lubricated with a lithium or lithium complex base grease which is suitable for most applications. Select a grease that is compatible with a lithium or lithium complex grease.

The bearings should contain as much grease as speed will permit. A full bearing with consequent slight leakage through the seal is the best protection against contaminant entry.

Extreme situations may require a change in lubricating periods as dictated by experience.

Generally, a lower quantity of grease at frequent intervals is more effective than a greater quantity at extended lubrication intervals.

Typical lubrication quantity is 1 pump from a standard grease gun every 250 hours of use.

In the higher speed ranges too much grease will cause overheating. The amount of grease that the bearing will take for a particular high speed application can be determined only by experience. If excess grease in the bearing caused overheating, it will be necessary to remove grease fitting to permit excess grease to escape.

5.6 Zero Leak Case Drain Relief Valve

The flail mower is equipped with a case drain line that is to be routed to the skid steer hydraulic reservoir.

It is normal for a hydraulic motor to have a slight amount of internal leakage.

The case drain line will allow this internal leakage to be returned to the reservoir, preventing excessive pressure on the motor seal.

Flail Mowers are equipped with a zero leak relief valve installed in the case drain line.

If the case drain line is not connected or becomes obstructed, the zero leak relief valve will vent the pressurized hydraulic fluid to the atmosphere. The zero leak relief valve will self reset after hydraulic pressure reduced.

⚠ WARNING

Pressurized fluids can penetrate the skin.

Use body and face protection while searching for leaks. A tiny, almost invisible leak can penetrate the skin, thereby requiring immediate medical attention.

Use wood or cardboard to detect hydraulic leaks, never use your hands.

If hydraulic fluid is coming out of the zero leak relief valve, shut down machine immediately. Inspect the case drain line connection and lines. Contact your dealer if case drain lines and connection are good.

NOTICE

Environmental hazard.

Clean up any spilled hydraulic fluid immediately.

A properly installed case drain protected by a zero leak relief valve will save the work of replacing the motor shaft seal and also improve the efficiency of your hydraulic system.

6 TROUBLESHOOTING

PROBLEM	CHECK	SOLUTION
Flail mower does not run or runs sluggish.	Rotor jammed.	Remove material from rotor.
	Low oil level.	Check oil level. Add if necessary.
	Low oil flow.	Check flow control on skid steer. See your dealer.
	Low pressure.	Check valve open.
Excessive vibration.	Cutting teeth worn or missing.	Replace worn, broken or missing teeth.
	Debris lodged in rotor.	Remove debris.

7 STORAGE

7.1 Storing

1. Store flail mower in a dry place.
2. Clean flail mower thoroughly. Dirt and wood chips will draw moisture and cause rust.
3. Check condition of cutting teeth. Replace as necessary. (See Service and Maintenance section.)
4. Check for loose or missing hardware.
5. Paint parts as necessary.

7.2 Remove From Storage

1. Review Operator's manual and check adjustments.
2. Check gear box oil level. Add oil as necessary. (See Service and Maintenance section.)
3. If parts have been replaced, verify they run properly.

BAUMALIGHT ATTACHMENT WARRANTY

This product is warranted to be free of defects in materials and workmanship under normal use and service, for a period of one year from the date of purchase. This warranty covers parts and labor, but does not cover misuse, negligence or dealer travel time.

Replacement of individual parts vs. assemblies are at the discretion of the manufacturer.

Baumalight products when purchased new are automatically registered for warranty on the date of purchase.

Warranty claims must include the bill of sale to the original purchaser.

This product must be operated and maintained in accordance with the Operating and Maintenance Instructions supplied with this unit.

Under no circumstances will the manufacturer be liable for any consequential damage or expense of any kind, including loss of profits. The manufacturer is under no circumstances liable for carrier unit damage of any kind. The manufacturer is not liable for the maintenance of the product.

This warranty is extended only to the original purchaser and there never is any warranty on anything sold through auction.

Units are to be returned at the customer's expense to the nearest Authorized Service Center. Damage in transit is not covered by warranty.

The work may be performed by the end user, if they are a qualified mechanic.

The Manufacturer's Liability is limited to repair of the product and/or replacement of parts and is given to the purchaser in lieu of all other remedies including incidental and consequential charges. There are no warranties, expressed or implied other than those specified herein. For the nearest Authorized Service Center call the manufacturer.

Model Number: _____ S/N:_____

Date of Purchase: _____ Owner's Name_____

For parts, specifications and the latest machine information please visit our website.

www.baumalight.com

MTB MFG INC.
CORPORATE HEADQUARTERS
4575 Powell Rd.,Wallenstein,
Ontario Canada N0B 2S0
www.baumalight.com