BAUMALIGHT™

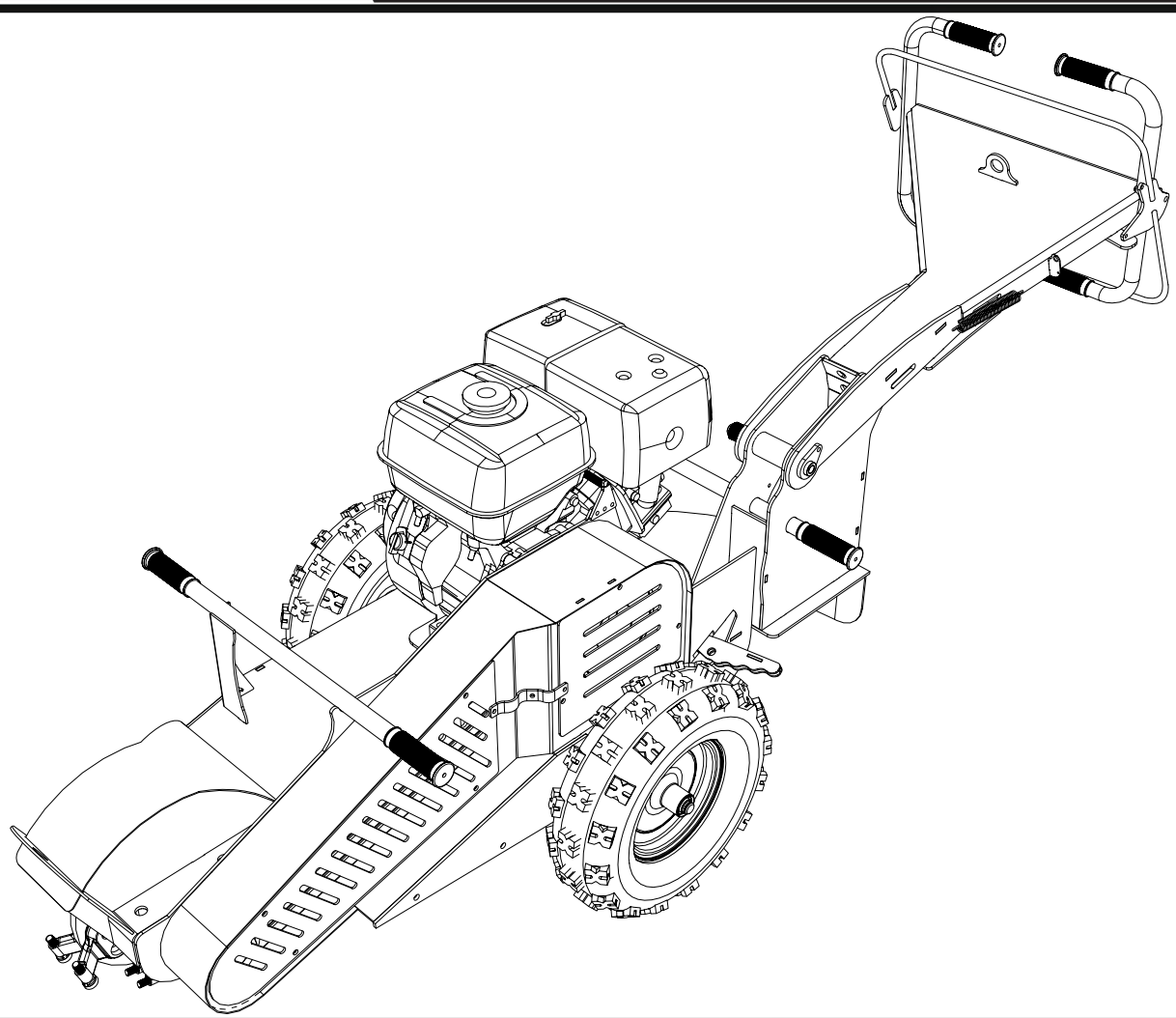

BAUMALIGHT™

WB44 Stump Grinder

OPERATOR'S MANUAL

Issue Date: October 2026

Service And Instructional Videos

Find online at baumalight.com/support

Following is a list of videos and documents available on Baumalights website and also on YouTube to help and enhance maintaining the stump grinder. The list below was current at the time this manual was issued. Additional content may be available.

Activity ID Number	Activity Name	Description	Item Available
224	Replacing Teeth	When To Replace H3000 Teeth.	Video

TABLE OF CONTENTS

1. INTRODUCTION 4
    1.1 Overview 4
    1.2 Intended Use And Foreseeable Misuse 4
2. COMPONENTS 5
3. SAFETY 6
    3.1 Safety Alert Symbol And Signal Words 6
    3.2 Operational Hazards 6
        Prepare for Emergencies 7
        Replace Safety Signs 7
        Lower Operating Speed 7
        Do Not Allow Riders 8
        Prevent Rollover 8
        Avoid Powerlines & Underground Utilities 8
    3.3 Maintenance Hazards 9
4 SAFETY SIGNS 10
5. OPERATION 12
    5.1 Pre-Operation Check List 12
    5.2 Carbide Teeth Break In 12
    5.3 Operation 12
    5.4 Starting Engine 13
    5.5 Grinding A Stump 13
    5.6 Storage 15
6 SERVICE AND MAINTENANCE 16
    6.1 Maintenance Intervals 16
    6.2 Inspections 17
    6.3 Throttle Inspection 17
    6.4 Clutch Inspection 18
    6.5 Rotate Cutting Teeth 19
    6.6 Replace Cutting Teeth 19
    6.8 Lubrication - Every 30 Hours 20
    6.7 Replace Tooth Holder 20
    6.9 Check Belt - Every 100 Hours 21
7 TROUBLESHOOTING 22
8 WARRANTY 23

1. INTRODUCTION

1.1 Overview

Congratulations on your choice of a Baumalight Stump Grinder to complement your stump grinding operation. This equipment has been designed and manufactured to meet the needs of a discriminating buyer for efficient grinding of stumps.

Safe, efficient and trouble free operation of your Stump Grinder requires that you and anyone else who will be operating or maintaining the Stump Grinder, read and understand the Safety, Operation, Maintenance and Troubleshooting information contained within the Operator's Manual.

This manual covers the Baumalight WB44 Stump Grinder. Use the Table of Contents as a guide to locate required information.

Keep this manual handy for frequent reference and to pass on to new operators or owners. Contact your Baumalight dealer if you need assistance, information or additional copies of the manuals.

Modifications may compromise safe operation of machine, subject users to serious injury or death and may void any remaining warranty.

This operator's manual does not replace, nor does its use discharge the operator from observing all safety codes or operating limitations as well as any applicable federal, state, provincial or local regulations.

There are three different types of labeling on this machine: safety, informative and product labels.

Safety Labels are pictorial with a yellow background and generally 2 panel. Top panel indicates the potential hazard and the bottom panel indicates how to avoid the hazard.

Informative Labels are generally pictorial, have a white background and can vary to the number of panels. The label will illustrate the function of a feature and is accompanied by detailed instructions in the owners manual, with the label illustrated along side.

Product Labels contain product information such as model number or serial number.

1.2 Intended Use And Foreseeable Misuse

The stump grinder is designed to be used by an experienced operator. Operator must be trained in the safe operation and hazards related to using the stump grinder, and the safe use of the grinder for the intended purpose. Operators will require personal protective equipment to reduce the risk from some hazards that cannot be completely eliminated or controlled by the design of the grinder.

Care is required to ensure that the stump grinder will not come across metallic objects, stones or other materials.

Stump grinders are not designed for use in hazardous atmospheres where there is a risk of fire or explosion due to flammable gases or vapors. Use in hazardous, explosive atmospheres is prohibited. Serious injury or death of the operator or bystanders may be caused if grinder is misused.

2. COMPONENTS

A. Rotor
B. Debris Guard
C. Engine
D. Safety Bar
E. Rotor Engagement Bar
F. Wheel Lock
G. Belt Guard
H. Lift Handles
I. Wheel Lock Lever
J. Handle Height Lock
K. Engine Stop Button

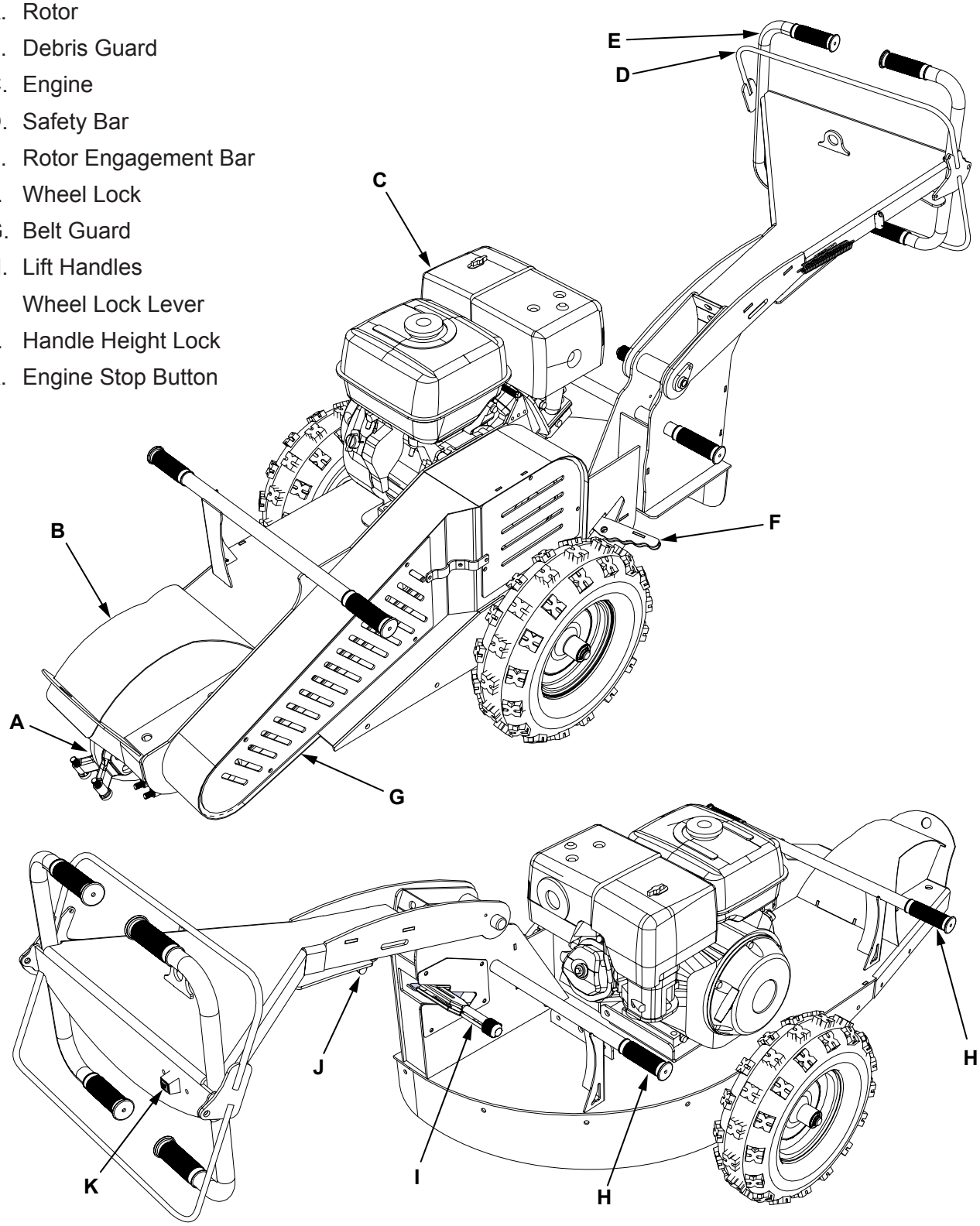

3. SAFETY

3.1 Safety Alert Symbol And Signal Words

You must read, understand and follow the instructions given by the operating unit manufacturers, as well as the instructions in this manual.

The safety information in this manual is denoted by the safety alert symbol:

This symbol means ATTENTION! BECOME ALERT! YOUR SAFETY IS INVOLVED!

The level of risk is indicated by the following signal words:

DANGER

DANGER - Indicates a hazardous situation, which, if not avoided, WILL result in death or serious injury.

WARNING

WARNING - Indicates a hazardous situation, which, if not avoided, could result in death or serious injury.

CAUTION

CAUTION - Indicates a hazardous situation, which, if not avoided, could result in minor or moderate injury.

NOTICE

NOTICE - Indicates a situation that could result in damage to the equipment or other property.

3.2 Operational Hazards

WARNING

Prevent death or serious injury.

Read and understand this manual before operating stump grinder.

Keep clear of moving components.

Stop engine before performing inspections or maintenance.

Never allow anyone near the stump grinder during operation.

Travel at a safe speed.

WARNING

Prevent death or serious injury from moving parts.

Moving parts can crush and dismember.

Do not operate without guards and shields in place.

Disconnect and lockout power source before adjusting or servicing.

WARNING

Safely operate equipment.

Allow only properly trained and qualified personnel to operate this equipment.

WARNING

Use stump grinder only for the designed applications.

Any other use may result in personal injury, damage to equipment and may void the warranty.

WARNING

Prevent serious injury or death.

Engine exhaust contains carbon monoxide. Carbon monoxide is an odorless gas that can cause death.

Avoid any areas or actions that expose you or others to carbon monoxide.

Never refuel a running engine or refuel near ignition sources.

WARNING

Protect from flying debris.

Wear proper safety glasses, goggles, or a face shield to protect from flying debris.

Carefully read all safety messages in this manual and on equipment safety signs. Keep safety signs in good condition and replace missing or damaged safety signs.

New equipment components and repair parts must include the current safety decal.

Learn how to properly operate equipment. NEVER operate or work around this equipment without proper instruction, while fatigued or under the influence of alcohol, prescription or non-prescription medication or if feeling ill.

Keep your equipment in proper working condition. Know the regulations and laws that apply to you and your industry. This manual is not to replace any regulations or laws. Additional information may be found at: www.asae.org or www.osha.gov. If you do not understand any part of this manual, contact your Baumalight dealer.

Prepare for Emergencies

- Be prepared in case of emergencies.
- Keep a fire extinguisher and first aid kit close to the machine.
- Keep emergency phone numbers close to your phone.
- Know your address so emergency services can locate you if an emergency arises.

Replace Safety Signs

- Replace missing or damaged safety signs.
- Safety signs are identified in Section 3.4 of this manual.
- Replacement safety signs are available from your Baumalight dealer.

Lower Operating Speed

- Keep rotor low and move at slow speeds on rough or uneven terrain.

Do Not Allow Riders

- NEVER lift or carry anyone on stump grinder.
- NEVER use stump grinder as a work platform.
- NEVER allow passengers on stump grinder.

Prevent Rollover

The equipment may rollover, resulting in death or serious injury. To help prevent rollover:

- Travel at a slow speed.
- Avoid sharp turns & sudden movement on slopes.
- Travel with rotor close to the ground.
- Avoid holes, ditches and other obstructions which may cause equipment to rollover.
- Use caution when operating on slopes and do not operate on excessively steep slopes.

Avoid Powerlines & Underground Utilities

⚠ DANGER

Prevent electrocution.

Death or serious injury can result if equipment comes near or contacts power lines.

Electrocution can occur without direct contact.

Have local utilities locate and mark under ground wires, cables, pipelines and other hazards before grinding.

Hazards From Modifying Equipment

Do not make any alterations to your stump grinder. Altering may cause your equipment to be unsafe and may void the manufacturers' warranty.

Avoid Wood Dust Inhalation

⚠ WARNING

Drilling, sawing, sanding or machining wood products can expose you to wood dust, a substance known to the State of California to cause cancer.

Avoid inhaling wood dust or use a dust mask or other safeguards for personal protection. For more information go to www.P65Warnings.ca.gov/wood.

⚠ WARNING

Wear an approved dust mask or respirator.

Follow local, state and federal regulations.

Avoid Loud Noise

⚠ WARNING

Prolonged exposure to loud noise can cause impairment or loss of hearing.

Wear a suitable hearing protective device.

3.3 Maintenance Hazards

Before servicing, park machine on a firm and level surface, set parking brake and place a “Do Not Operate” tag on engine controls. Read and understand this manual. If you do not understand any part of the manual, contact your Baumalight dealer.

Always wear face and/or eye protection, safety shoes, and other protective equipment appropriate for the job.

Do not make unauthorized modifications. Contact your Baumalight dealer before you weld, cut/drill holes, or make any other modifications.

WARNING

Moving parts can crush and cut.

Keep clear of moving components.

WARNING

Crushing and severing hazard.

Before performing inspections, service or maintenance:

- **Park machine on firm, level surface.**
- **Engage wheel lock.**
- **Turn engine off.**

WARNING

Entanglement hazard.

Keep clear of moving components.

Wear proper protective equipment appropriate for the job.

4 SAFETY SIGNS

⚠ WARNING

To protect you and others against death or serious injury, all labels shown must be on stump grinder and must be legible.

If any of these labels are missing or cannot be read, contact your dealer for replacement labels.

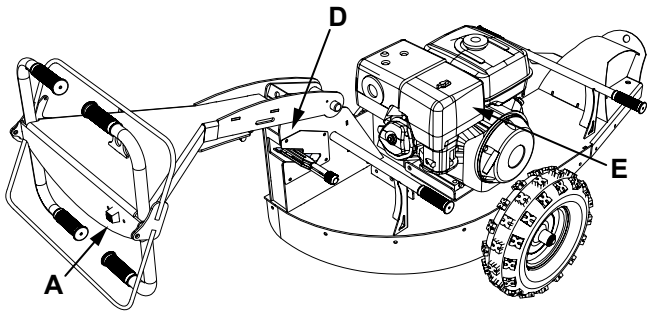

The two and four panel safety decals are pictorial and have a yellow background. The panel with a triangle indicates the potential hazard. The panel without a triangle indicates how to avoid the hazard.

If any of the decals are missing, are damaged, or if you do not understand the decal, please contact your dealer.

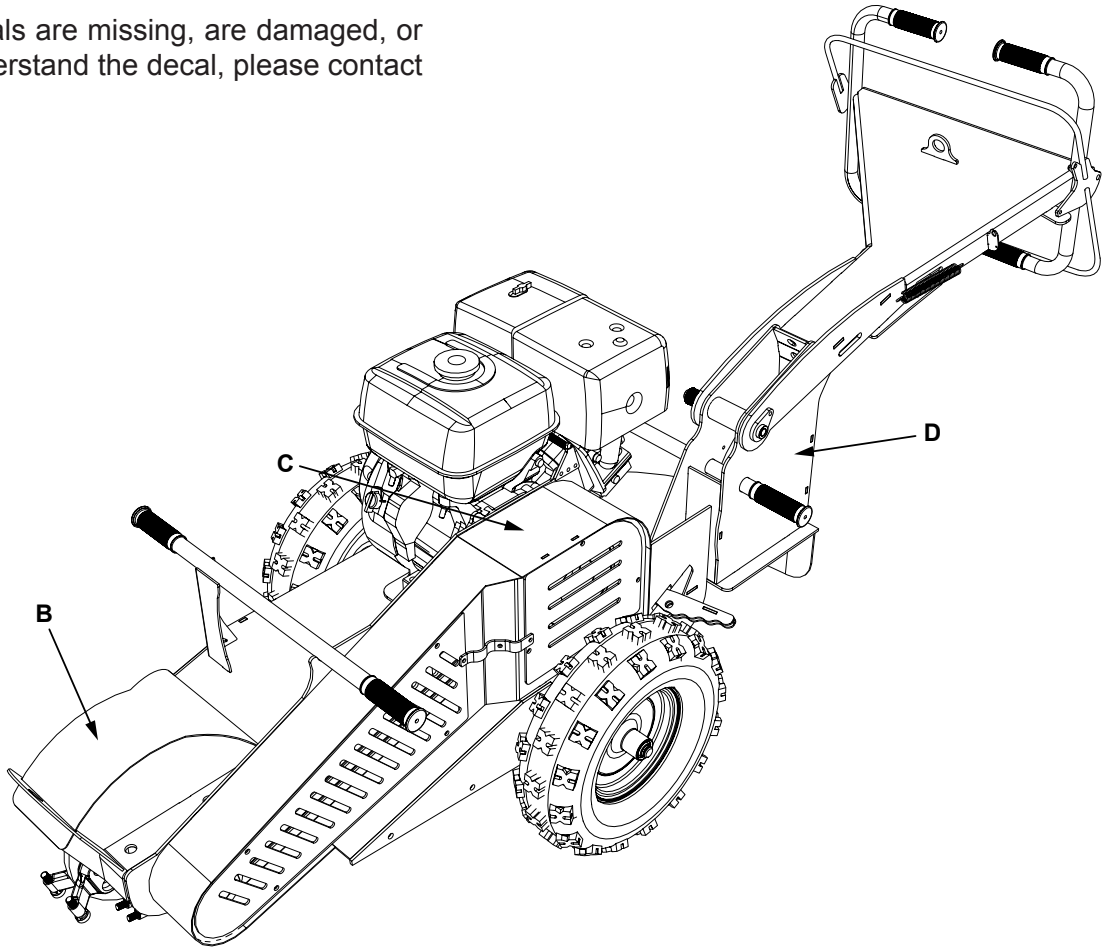

Decal A: D003274

Decal B: D005367 ⚠ WARNING - Rotating blade hazard. Keep back 75 m while machine is operating. Wait for blade to stop before approaching machine.

Decal C: D005230 ⚠ WARNING - Rotating parts hazard. Do not reach into machine. Keep away from machine.

Decal D: D005039 ⚠ WARNING - Pinch hazard. Keep back while machine is operating.

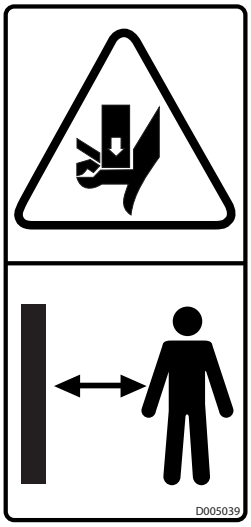

Decal E: D005029 ⚠ WARNING - Read and understand safety signs on the machine and operating instructions in this manual before operating machine.

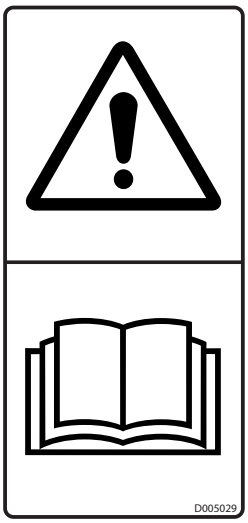

5. OPERATION

⚠ Keep bystanders, livestock, pets, etc away from work area.

⚠ Always wear protective equipment appropriate for the job.

⚠ Do not operate, work on or around this machine while under the influence of alcohol, drugs or if feeling ill.

⚠ Keep clear of moving machinery at all times.

⚠ Stop stump grinder engine before leaving operators area.

⚠ It is your responsibility to operate this equipment safely. You must be familiar with the equipment and all safety practices before use.

⚠ Do not allow untrained or unqualified people to operate this equipment.

5.1 Pre-Operation Check List

Perform the following checks prior to operation.

- Review and understand this manual and engine operators manual.
- Verify safety decals are installed and legible. Replace if damaged or missing.
- Verify that all hardware is tight.
- Verify that local utilities have marked all underground utilities.

5.2 Carbide Teeth Break In

New carbide teeth are razor sharp and can chip and shatter easily when they hit hard objects. Once the razor sharpness has worn away, tips do not chip as easily. Observing these precautions will extend the life of the carbide teeth and reduce operating expenses.

5.3 Operation

⚠ WARNING

Prevent serious injury or death.

Keep clear of moving components.

⚠ WARNING

Prevent serious injury or death.

Engine exhaust contains carbon monoxide. Carbon monoxide is an odorless gas that can cause death.

Avoid any areas or actions that expose you or others to carbon monoxide.

⚠ WARNING

Drilling, sawing, sanding or machining wood products can expose you to wood dust, a substance known to the State of California to cause cancer.

Avoid inhaling wood dust or use a dust mask or other safeguards for personal protection. For more information go to www.P65Warnings.ca.gov/wood.

⚠ WARNING

Wear an approved dust mask or respirator.

Follow local, state and federal regulations.

⚠ WARNING

Never operate stump grinder when other people are in the vicinity. Debris can be thrown several feet from cutting area.

Keep all shields in place.

5.4 Starting Engine

1. If engine is cold, set choke to on position. If engine is warm, choke should be off. Pull recoil start to start engine. Move choke to off position.

5.5 Grinding A Stump

⚠ WARNING

Prevent serious injury or death.

Keep clear of moving components.

1. Pull handle height lock (A) and adjust handle to a comfortable level. Push lock in to engage in hole to lock handle.

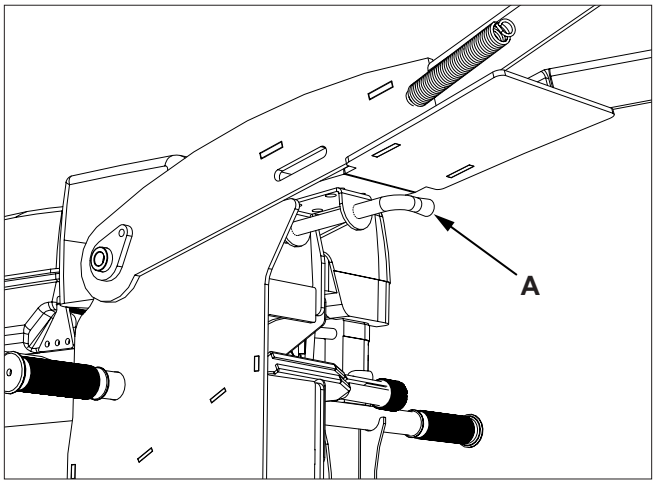

2. If the stump is on a grade, position stump grinder lower on the grade with the cutting wheel on the stump grinder higher up the grade.
3. Position stump grinder up to the front edge of the stump.
4. Verify stump grinder is positioned at the edge of the stump that is closest to the stump grinder.
5. Position rotor close to, but not touching stump.

6. Pull wheel lock lever (B) to lock left wheel. Lever is shown in the locked position. This will allow you to pivot stump grinder while grinding stump.

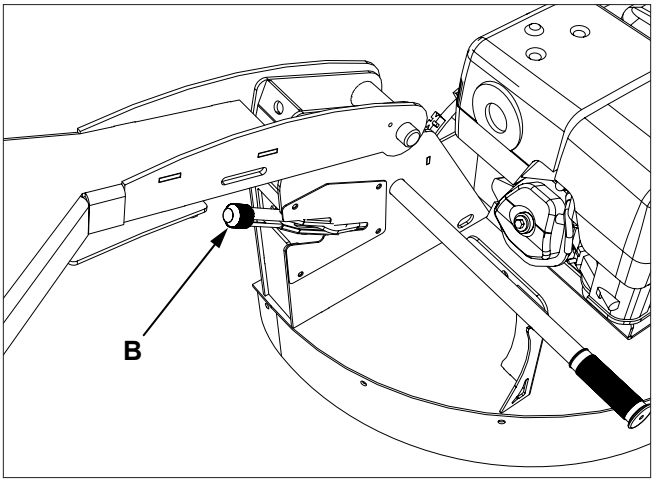

NOTICE

Grinding a stump with engine at less than operating speed may result in clutch damage and also void the warranty.

Rotor engagement bar (C) must be tight against handle (D) and engine running at operating speed (3600 rpm) when grinding stump.

7. Pull rotor engagement bar (C) tight against handle (D). This will increase engine rpm to operating speed and engage rotor. Releasing rotor engagement bar (C) will decrease engine speed and disengage rotor.

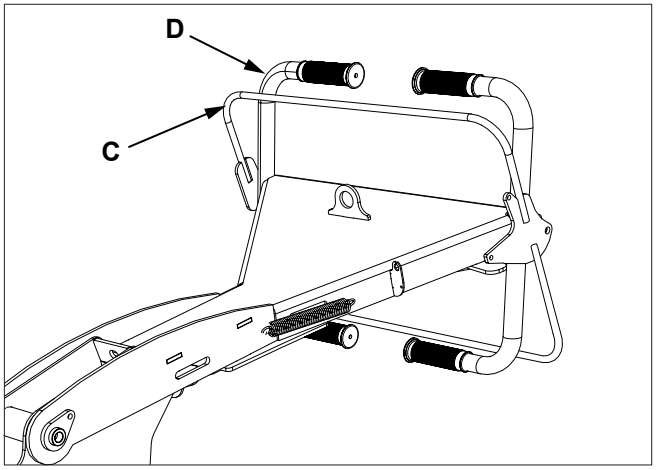

8. Make the first pass across front edge of stump, pivoting the stump grinder from side to side in 3-6 in. (76-152 mm) passes.
9. Continue to take passes across the front edge of the stump, taking 3-6 in. (76-152 mm) on each pass.

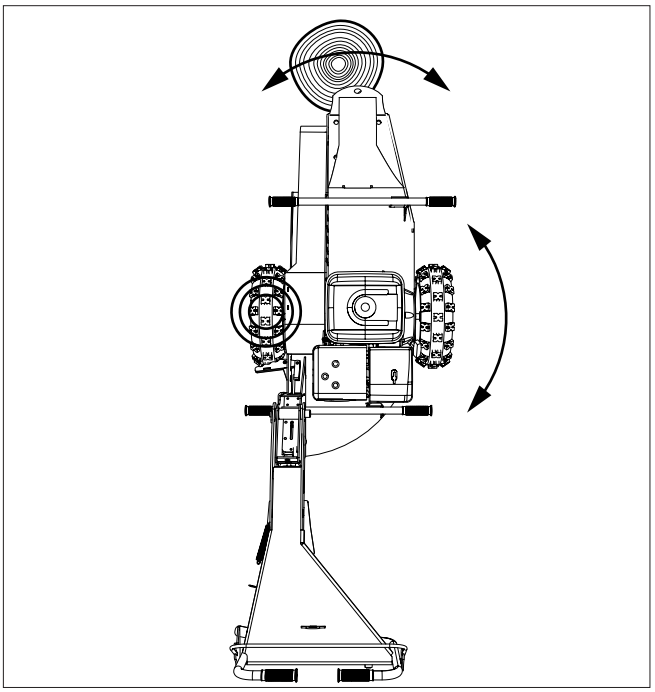

11. When ground level is reached, continue to grind below the surface to the bottom of the stump where the roots branch out.
12. Release rotor engagement bar (C) to decrease engine speed and disengage rotor.
13. Release wheel lock and position the stump grinder beside the new front edge of the stump.
14. Engage wheel lock.
15. Pull rotor engagement bar (C) tight against handle (D). This will increase engine rpm to operating speed and engage rotor.
16. Make multiple passes over the front edge of the stump, taking 3-6 in. (76-152 mm) on each pass.
17. Reposition stump grinder as needed until the entire stump has been removed to below ground level.
18. Follow the roots, taking as much of the larger surface roots as possible. If these are not removed they can, over time, protrude from the ground in areas where there is a heavy freeze/ thaw cycle.
19. Release rotor engagement bar (C) to decrease engine speed and disengage rotor.
20. Move stump grinder away from stump to a flat surface.
21. Stop stump grinder engine.

5.6 Storage

Pull handle lock (A) out and flip handle over for storage.

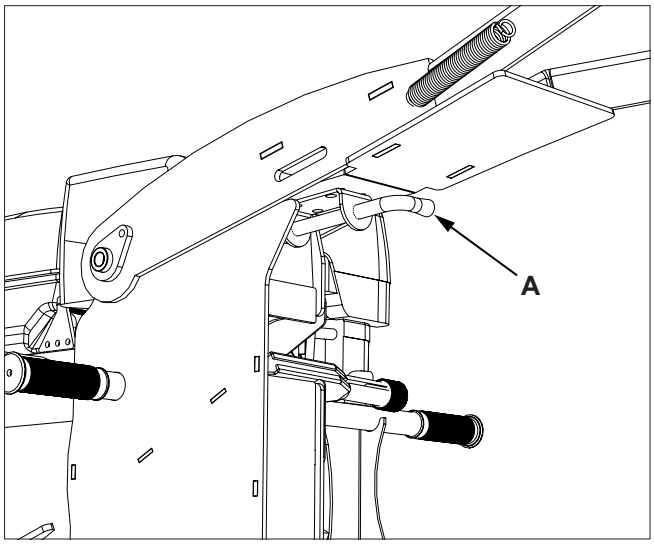

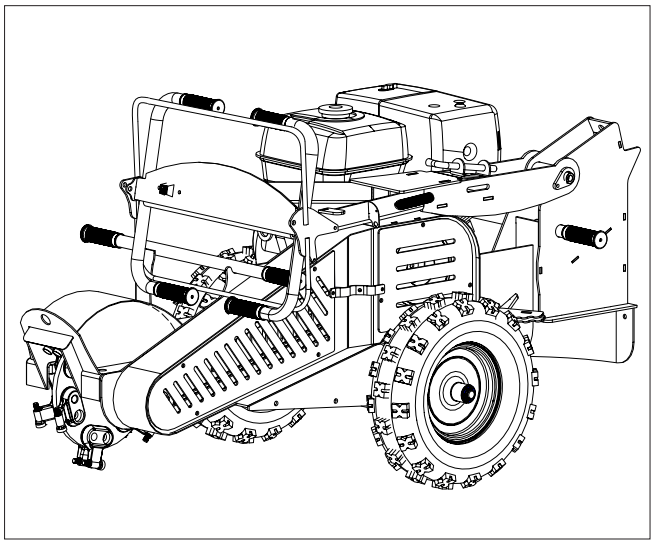

6 SERVICE AND MAINTENANCE

6.1 Maintenance Intervals

Item	Daily Before Use	Every 4 Hours	Every 30 Hours	Weekly	Every 100 Hours
Verify emergency stop is functioning properly.	•				
With engine stopped, verify throttle is fully open when safety bar is pulled tight against handle.	•				
Check cutting teeth for wear. Rotate or replace cutting teeth as necessary.		•			
Check engine air filter. Clean or replace as necessary.		•			
Lubricate pivot point grease fittings.			•		
Lubricate rotor bearings			•		
Check rotor bearings for side-to-side and up/down movement. Replace bearings if movement is found.				•	
Check drive belt condition and tension.					•
Change engine air filter.					•
Change engine oil.					•

⚠ WARNING

Moving parts can crush and cut.

Keep clear of moving components.

Stop engine before performing inspections or maintenance.

⚠ WARNING

Prevent serious injury or death.

Wear proper protective equipment appropriate for the job.

We design many of our products using industry-standard parts that are widely available from local supply stores.

Many replacement parts such as bearings, belts, seals, touch-up paint and cutting teeth can often be found through local suppliers, not just from Baumalight.

6.2 Inspections

Inspect the unit for worn or damaged parts. Repair or replace parts as needed.

6.3 Throttle Inspection

With engine stopped, pull safety bar tight against handle and verify throttle (A) is against stop (B). If throttle is not against stop, loosen clamp screw (C) and adjust throttle cable case as necessary. Tighten screw (C) and re-check. Throttle (A) must be against stop (B) and when safety bar is tight against handle. Engine must be running at operating speed (3600 rpm) when grinding a stump.

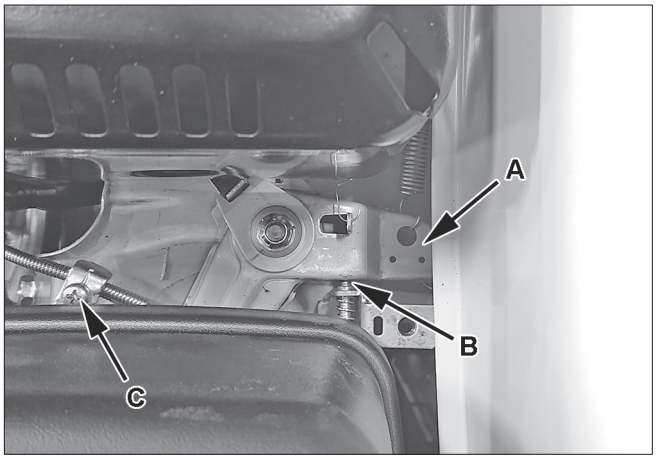

6.4 Clutch Inspection

Inspect clutch between each use.

NOTICE
Prevent clutch damage. ***Engine must be running at operating speed (3600 rpm) when grinding a stump.***

1. Park grinder on a level surface.
2. Shut off engine.
3. Inspect clutch bearing seal area (A). Grease on outside of seal indicates excessive heat. Discoloration in areas (B) also indicates excessive heat. Excessive heat is a result of clutch slippage. This is normally due to grinding a stump at less that operating speed. Verify engine throttle is properly adjusted so engine runs at operating speed (3600 rpm) when safety bar is tight against handle.

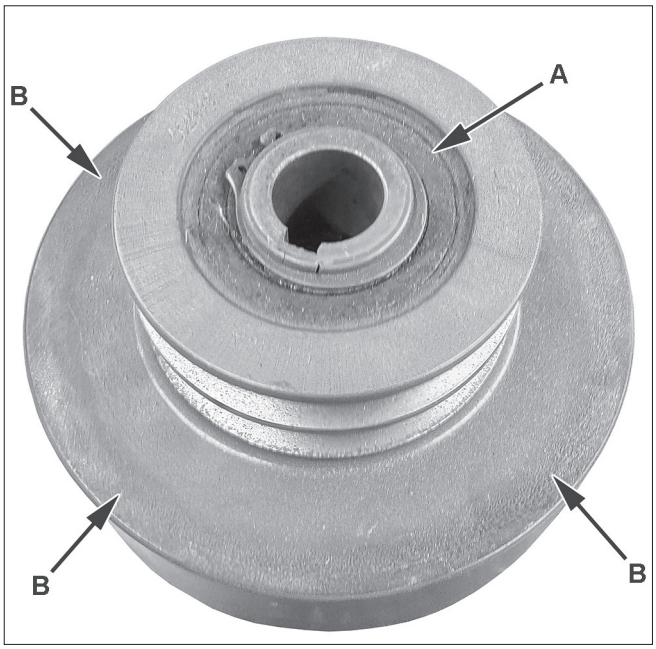

4. Inspect pulley grooves. Wear in the bottom of pulley grooves (C) indicates that belt is worn out and must be replaced. Excessive belt wear is a result of belt slippage. This is normally due to belt not being tight enough and will damage the pulley as it must run cool to work properly.

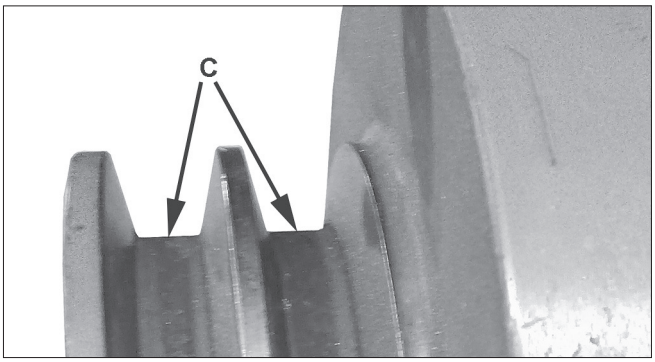

6.5 Rotate Cutting Teeth

Check cutting teeth every 4 hours of use. Keep cutting teeth in good condition. Unit will cut faster and remaining teeth will last longer if broken or worn teeth are replaced.

Each tooth can be rotated up to two times before replacement is necessary.

1. Park grinder on a level surface.
2. Shut off engine.
3. Inspect teeth for wear on top edge (B). Once top edge is worn, rotate tooth so a new edge is on top (cutting) edge.
4. Loosen locknut (A) on tooth and rotate tooth 1/3 turn. Flat shoulder on tooth will fit against shoulder (C) on tooth holder.
5. Tighten locknut (A) to torque listed below.

H3000 Teeth - 35 lb/ft (47 Nm)
G3000 Teeth - 35 lb/ft (47 Nm)
W3000 Teeth - 25 lb/ft (34 Nm)

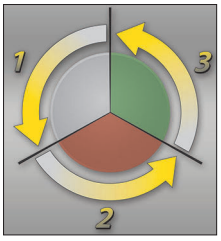

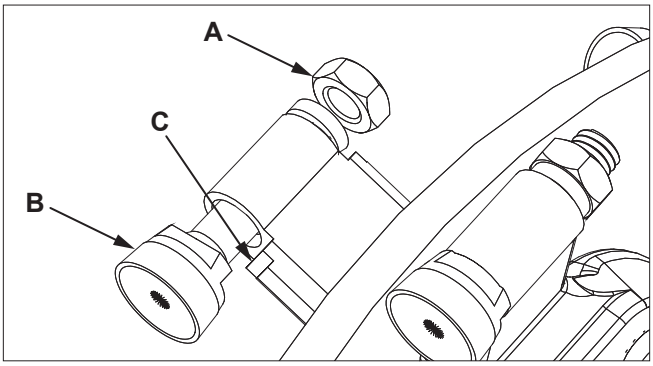

6.6 Replace Cutting Teeth

1. Park stump grinder on a level surface.
2. Shut off engine.
3. Inspect cutting teeth (B) for damage and wear. Replace individual teeth as needed.
4. Remove locknut (A) and spacer from tooth (B). Install new tooth. Flat shoulder on tooth will fit against shoulder (C) on tooth holder.
5. Install spacer and locknut.
6. Tighten locknut (A) to torque listed below.

H3000 Teeth - 35 lb/ft (47 Nm)
G3000 Teeth - 35 lb/ft (47 Nm)
W3000 Teeth - 25 lb/ft (34 Nm)

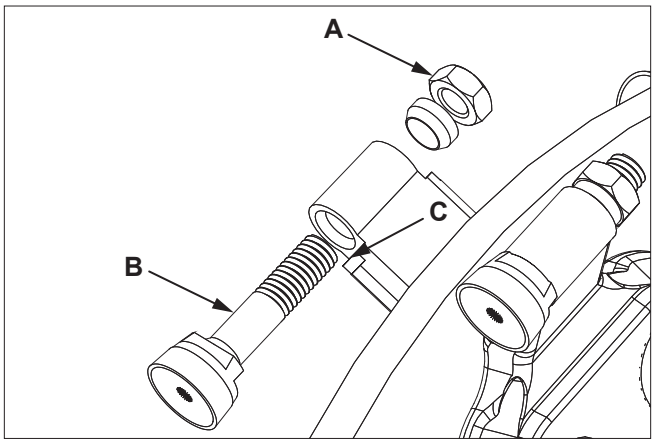

6.7 Replace Tooth Holder

1. Park stump grinder on a level surface.
2. Shut off engine.
3. Inspect tooth holders (A) for damage and wear. Replace individual tooth holders as needed.
4. Remove tooth from tooth holder.
5. Remove mounting hardware on tooth holders. Install new tooth holder and tighten mounting hardware.
6. Install tooth into new tooth holder.
7. Tighten locknut to torque listed below.

H3000 Teeth - 35 lb/ft (47 Nm)
G3000 Teeth - 35 lb/ft (47 Nm)
W3000 Teeth - 25 lb/ft (34 Nm)

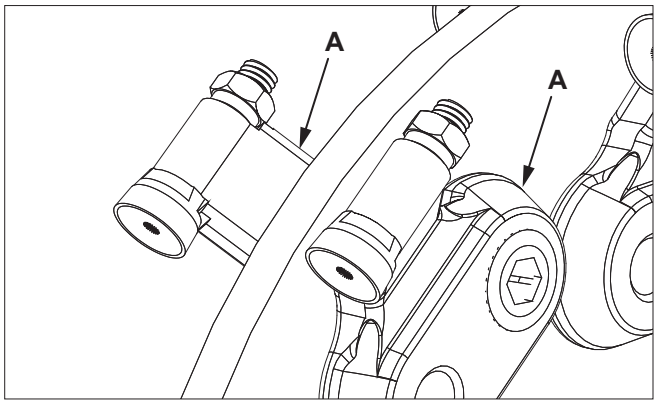

6.8 Lubrication - Every 30 Hours

1. Park stump grinder on a level surface.
2. Shut off engine.
3. Lubricate rotor bearings (A).

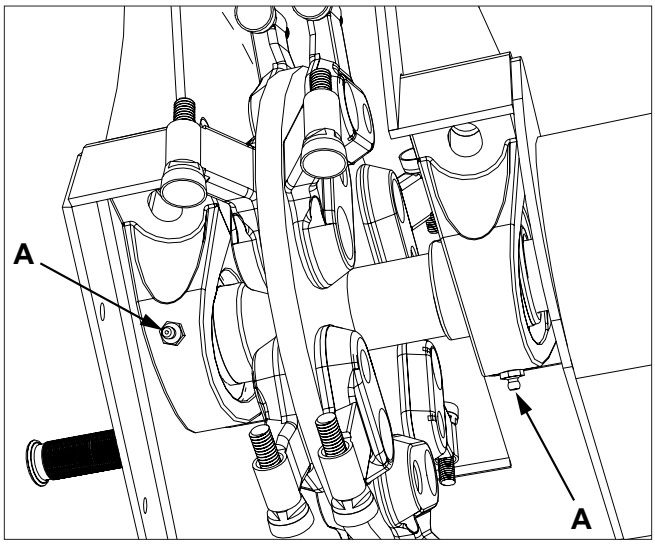

4. Lubricate pivot pin (B).

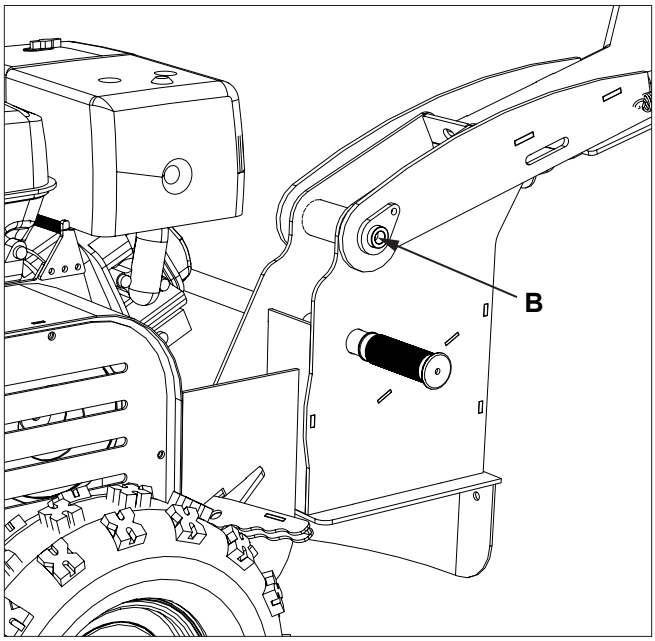

5. Lubricate axles (C).

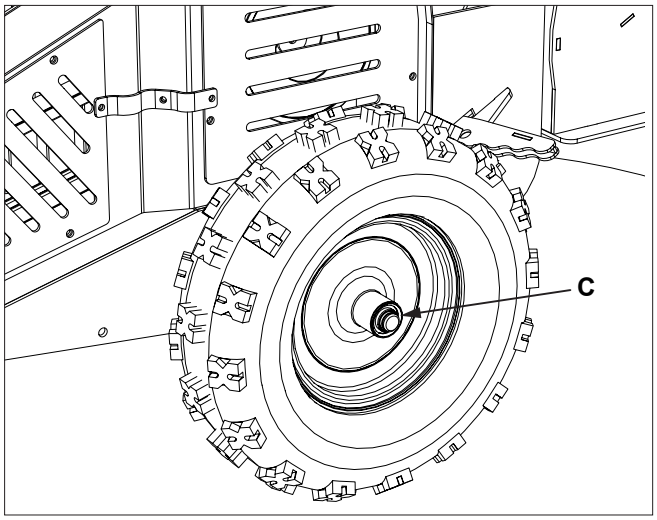

6.9 Check Belt - Every 100 Hours

1. Park stump grinder on a level surface.
2. Shut off engine.
3. Remove belt guard and inspect belt (A) for proper tension, wear, damage and correct alignment. Replace belt if worn or if belt is damaged. Check belt alignment. Engine pulley and rotor pulley must be aligned or belt will wear quickly. If not aligned, adjust engine pulley and/or rotor pulley.

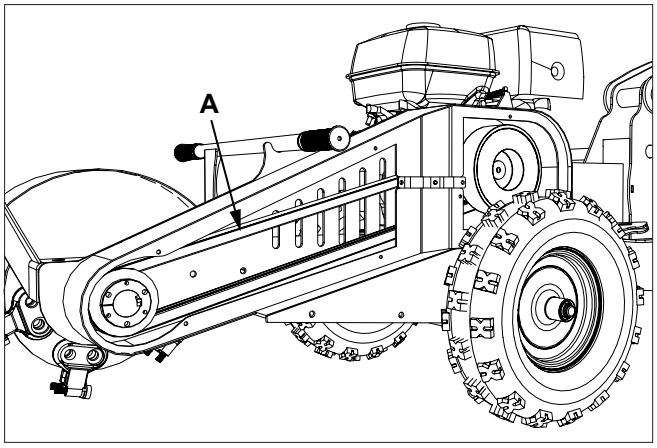

Belt deflection (B) should be 0.5 in. (13 mm) at 3.0 lbs of force for a used belt or 4.25 lbs of force for a new belt.

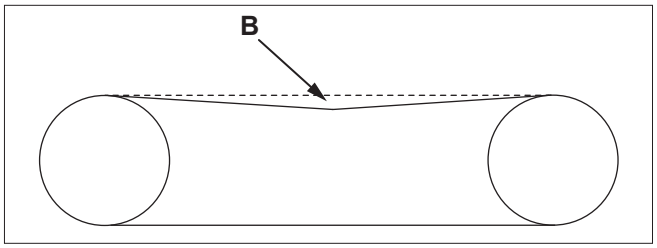

4. To adjust belt tension, loosen engine mounting bolts. Loosen jam nut (C). Turn adjustment bolt (D) clockwise to tighten belt to proper tension. Tighten jam nut (C) and engine mounting bolts.
5. Install belt guard. Do not operate stump grinder with belt guard removed.

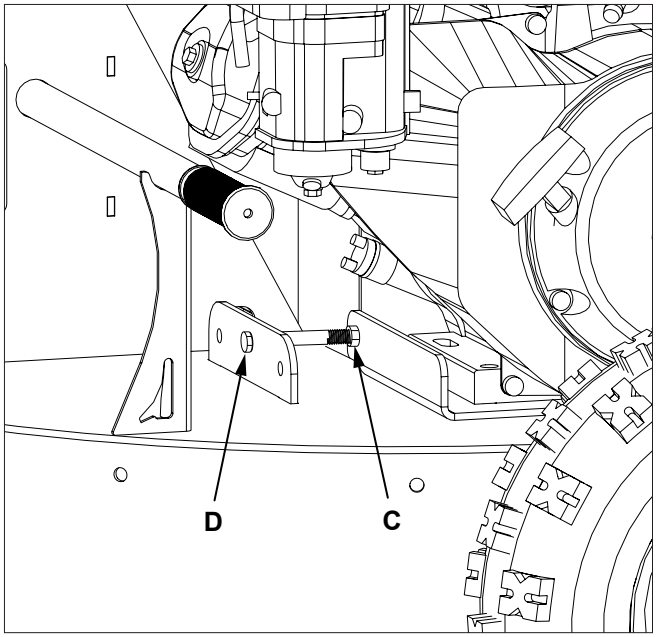

7 TROUBLESHOOTING

Problem	Probable Cause	Solution
Rotor does not spin.	Rotor jammed.	Lock out power and clear debris from rotor.
	Drive belt loose.	Tighten drive belt.
Rotor rotates slow or sluggish.	Drive belt loose.	Tighten drive belt.
Excessive vibration.	Debris lodged in rotor.	Lock out power and clear debris from rotor.
Smoke emitting from engine exhaust pipe.	Dirty or clogged engine air filter.	Change engine air filter.

8 WARRANTY

To view the warranty, scan the QR Code below, or go to Baumalight.com. From the Support drop down, click on Support, then select Stump Grinders. Select Product Warranty.

For parts, specifications and the latest machine information please visit our website.
www.baumalight.com

MTB MFG INC
CORPORATE HEADQUARTERS
4575 Powell Rd.
Wallenstein, Ontario Canada
N0B 2S0
www.baumalight.com