BAUMALIGHT™

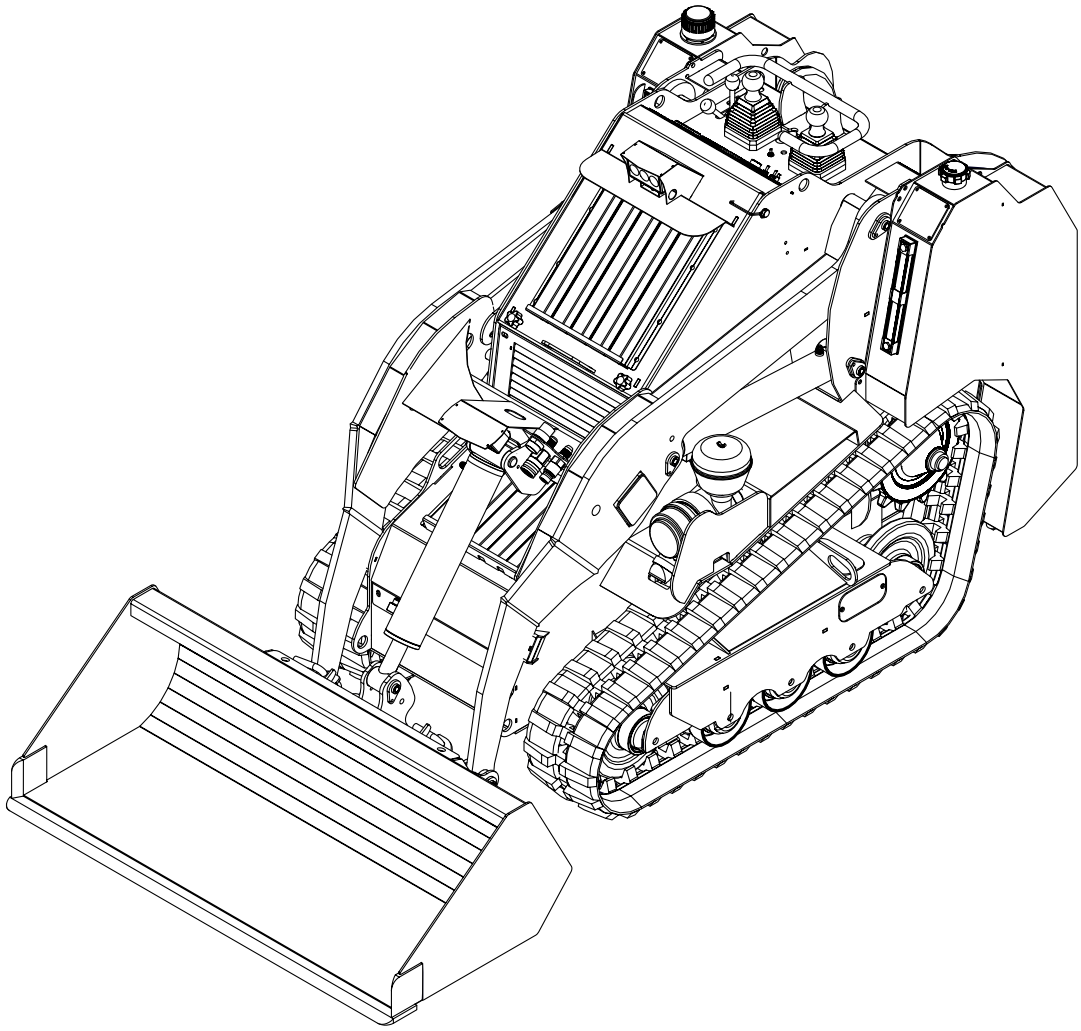

BAUMALIGHT™

TRL536D, TRL620D And TRL630D Tracked Mini Skidsteer

OPERATOR'S MANUAL

Issue Date: October 2026

WARNING

Breathing diesel engine exhaust exposes you to chemicals known to the State of California to cause cancer and birth defects or other reproductive harm.

Always start and operate the engine in a well-ventilated area.

If in an enclosed area, vent the exhaust to the outside.

Do not modify or tamper with the exhaust system.

Do not idle the engine except as necessary.

For more information go to www.P65Warnings.ca.gov.

WARNING

Batteries, battery posts, battery terminals, and related accessories can expose you to chemicals including lead and lead compounds, which are known to the State of California to cause cancer and birth defects or other reproductive harm.

For more information go to www.P65Warnings.ca.gov.

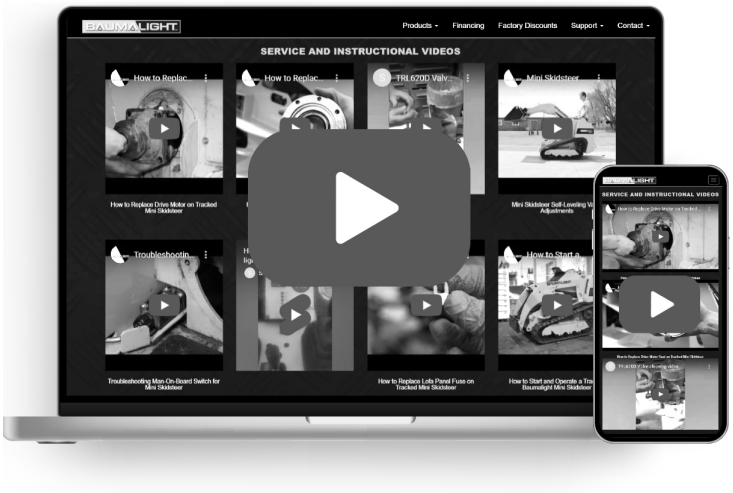

Service And Instructional Videos

Find online at baumalight.com/support

Following is a list of videos and documents available on Baumalights website and also on YouTube to help and enhance maintaining the skidsteer. The list below was current at the time this manual was issued. Additional content may be available.

Activity ID Number	Activity Name	Description	Item Available
434	Hydraulic Cylinder.	Replacing Seals On Hydraulic Cylinder.	Video
418	Adding New Joystick Handle D007225.	Steps For Adding In Joystick Handle On Boom Valve.	Video
395	Digital Controller.	How To Use Digital Controller.	Video
370	Electrical AUX Plug.	How To Install Electrical Aux Plug.	Video
345	D007083 Joystick Handle	How To Install D007083 2 Button Hydraulic Aux Joystick Handle.	Video
248	Drive Pump Seal	Replacing Drive Pump Seal.	Video
344	Drive Motor Ports	Turning Drive Motor Ports Different Direction	Video
162	Replacing Seal	Replacing Drive Motor Seal.	Video
315	Hydraulic Motor	Breaking In Replacement Hydraulic Motor Or Pump.	Video
338	Pressure Lock	Relieving Hydraulic Coupler Pressure Lock.	Video
339	Operator Plate	Adjusting Stiffness Of New Operator Plate.	Video
340	Floating Platform Retrofit Kit	Installing New Retrofit Operator Platform.	Video
296	Weight Kit	Installing Counterweight Kit (B3 And Newer) (D006852).	Video
305	Plate Adaptors	Difference Between Plate And Adaptor Options.	Video

Activity ID Number	Activity Name	Description	Item Available
291	Erratic Driving	One Side Will Not Stop Driving.	Video/Document
258	Changing Oil	Changing Oil And Oil Filter.	Video
259	Engine Rubber Mounts	Replacing Engine Rubber Mounts (For Revisions B2 And Older).	Video
257	Lofa Panel	Replacing Pin In Lofa Panel Plug.	Video
256	Lofa Panel	Troubleshooting Flickering Panel Lights.	Video
254	Boom Valve	Adjust Pressure Relief.	Video
250	Informational Testing Process	Breakout Force And Tipping Point Testing Process.	Video
246	Valve Repair	Install D006744 Spring To Center Kit For Aux Lever.	Video
248	Drive Pump Seal	Replacing Drive Pump Seal.	Video
234	Valve Repair	Self Leveling Valve Leak.	Video/Document
223	First Things To Check Machine Does Not Turn	Check If Sprocket Is Spinning - Key Is Sheared.	Video
222	Engine Bogging Down.	Preventing Engine From Bogging Down While In Bulldozing Mode.	Video
213	Engine Bogging Down.	Trouble With Engine Bogging Down In Bulldozer Mode.	Document
214	Trouble Shooting Movement In Neutral.	Mini Skidsteer Moves When Joystick Is In Neutral Or Does Not Drive Straight.	Document
205	Calibrate Tachometer No.2.	Calibrate Tachometer Option 463-00111.	Document
208	Adjust Ground Speed.	Adjust Speed On Drive Pump.	Document
202	Calibrate Tachometer No.1.	Calibrate Tachometer Option 463-1000-35.	Document
195	Mini Plate Check.	Check Plate Adaptor Dimensions.	Document
184	Remove And Install Boom Valve.	Boom Valve Replacement.	Document

Activity ID Number	Activity Name	Description	Item Available
183	Replacing Drive Motor.	Process Of Replacing Drive Motor.	Video
169	First Things To Check.	Track Maintenance.	Document
163	First Things To Check.	Track Keeps Coming Off.	Document
162	Replacing Seal.	Replacing Drive Motor Seal.	Video
46	TRL620D Radiator Replacing Engine Cooler Steps.	Replace TRL620D Radiator (Engine Cooler)..	Document
153	Valve Repair.	Cleaning Stem On Boom Valve.	Video
148	Wheel Motor Seal Replacement.	Wheel Motor Seal Instructions.	Document
146	Trouble Shooting Engine Cooler.	First Thing To Check.	Document
134	Changing Bolts On Aux Pump.	Replacing Bolts On Auxiliary Pump.	Document
117	Self-Leveling Valve.	How To Adjust Self-Leveling Valve.	Video
125	Valve Repair.	Spool Valve Parts For D003723.	Document
126	Valve Repair.	3 Spool Section Valve D003723.	Document
92	Troubleshooting.	Taking Apart Man-On-Board Switch.	Video
84	Trouble Shooting Engine Shut Down.	With Flashing Aux 1 Panel Light.	Video
83	Replacing Fuse.	Replacing Lofa Panel Fuse.	Video
31	Tips..	Starting And Operating Unit.	Video
1	Replace Hydraulic Cooler.	Remove Old Cooler.	Video
2	Replace Hydraulic Cooler.	Install New Hydraulic Cooler.	Video
54	Troubleshooting.	Unable To Lift Boom.	Video
19	Troubleshooting.	Unable To Drive.	Video
24	Leaks.	Tracing Leaks.	Video
13	Track Maintenance.	Install New Track.	Video
12	Track Maintenance.	Remove Track.	Video
16	Track Maintenance.	Adjust Track Tension.	Video

Activity ID Number	Activity Name	Description	Item Available
25	Replacing Drive Pump.	Removing Drive Pump.	Video
26	Replacing Drive Pump.	Installing New Drive Pump.	Video
28	Valve Repair.	Reassembling Float Spool In Boom Valve.	Video
29	Valve Repair.	Troubleshooting Sagging Boom.	Video

TABLE OF CONTENTS

1 INTRODUCTION 10
1.1 Overview 10
1.2 Intended Use And Foreseeable Misuse 10
1.3 Components 11
1.4 Serial Number Plate 11
1.5 Operator Orientation 12
1.6 OEM Engine 12

2 SAFETY 13
2.1 Safety Alert Symbol And Safety Words 13
2.2 Operational Hazards 13
Electric Lines And Underground Utilities 14
Prepare For Emergencies 15
Replace Safety Signs 15
Do Not Allow Riders 15
Lower Operating Speed 15
Avoid Rollover 15
Raised Attachment 16
Avoid Loud Noise 16
Hazards From Modifying Equipment 16
Avoid High Pressure Fluids 16
2.3 Maintenance Hazards 17

3 SAFETY SIGNS 18

4 OPERATION 21
4.1 Preparation For Use 21
Electrical Line 21
4.2 Utility Locating 21
4.3 Before Operation 22
Test Operator On Board Safety Switch 22
Gas Line 22
Fill Fuel Tank 23
Check Engine Oil Level 23
Check Hydraulic Fluid Level 24
Check Engine Coolant Level 25
4.4 Machine Controls 26
Skidsteers Equipped With Analog Control Panel 26
Skidsteers Equipped With Digital Control Panel 26
Digital Control Panel - With Engine Off 27
Digital Control Panel - With Engine On 27
Engine Throttle 27
Park Brake 27
Drive Joystick 28

Boom Joystick 28
Key Switch 28
Auxiliary Hydraulic Control 29
Engine Preheat 29
4.5 Start And Stop Engine 29
Start Engine - Above 40° F (4° C) 29
Start Engine - Below 40° F (4° C) 30
Stop Engine 30
4.6 Attachments 31
Connect Attachment 31
Connect Hydraulics 32
Disconnect Attachment 32
4.7 Transporting 33
4.8 Lift Arm Lock 33
Engage Lift Arm Lock 33
Disengage Lift Arm Lock 34
4.9 First Time User Tips 34
4.10 Operation 35
Slope Operation 35
General Operation 35
Two-Speed Operation - TRL536D And TRL630D Only 35
4.11 Adjust Ground Speed/Drive Power 36
4.12 Adjust Hydraulic Relief Valve 37

5 SERVICE AND MAINTENANCE 38
5.1 Safety 39
5.2 Initial 10 Hours 39
5.3 Daily Or Every 10 Hours 39
Check Engine Oil Level 39
Check Engine Air Filter And Precleaner 40
Check Hydraulic Hoses 40
Check Park Brake Operation 40
Check Hydraulic Fluid Level 40
Check Coolant Level 41
Check Radiator Intake Screen And Radiator 42
Check Hydraulic Fluid Cooler 42
Check Operator On Board Safety Switch 43
Inspect Tracks 43
General Inspection 43
5.4 Every 20 Hours 43
Lubrication 43
5.5 Every 100 Hours 44
Track Tension 44
Check Engine Fan Belt 45

Replace Air Filter 45
Check Drive Sprocket Nut Tightness 45
5.6 Every 250 Hours 46
Change Engine Oil And Filter 46
Check Air Intake Hoses 46
5.7 Every 500 Hours 46
Replace Fuel Filter 46
Replace Hydraulic Filter 47
5.8 Every 1000 Hours 48
Change Hydraulic Fluid And Filter 48
5.9 As Required 49
Check Battery 49
Check And Adjust Auxiliary Hydraulic Pressure 50

6 TROUBLESHOOTING 51

7 STORAGE 54
7.1 Storing 54
7.2 Remove From Storage 54

8 WARRANTY 55

1 INTRODUCTION

1.1 Overview

Congratulations on your choice of a Baumalight Tracked Mini Skidsteer. This equipment has been designed and manufactured to meet the needs of a discriminating buyer for efficient operation.

Safe, efficient and trouble free operation of your skidsteer requires that you and anyone else who will be operating or maintaining the skidsteer, read and understand this Operator's Manual.

This manual covers the TRL536D, TRL620D and TRL630D Tracked Mini Skidsteer. Use the Table of Contents as a guide to locate required information.

Keep this manual handy for frequent reference and to pass on to new operators or owners. Contact your Baumalight dealer if you need assistance, information or additional copies of the manuals.

When this machine is worn out and no longer in use, it should be returned to the retailer or other party for recycling.

OPERATOR ORIENTATION - The directions left, right, front and rear, as mentioned throughout this manual, are as seen from the operator's platform and facing in the direction of travel.

1.2 Intended Use And Foreseeable Misuse

The skidsteer is designed to be used by experienced operators, trained in the safe operation and hazards related to using the skidsteer and the safe use of the skidsteer for the intended purpose. Operators will require personal protective equipment to reduce the risk from some hazards that cannot be completely eliminated or controlled by the design of the skidsteer.

The skidsteer is not designed for use in hazardous atmospheres where there is a risk of fire or explosion due to flammable gases or vapors. Use in hazardous, explosive atmospheres is prohibited.

Serious injury or death of the operator or bystanders may be caused if the skidsteer is misused. Misuse may also cause damage to the attachment skidsteer is carrying.

1.3 Components

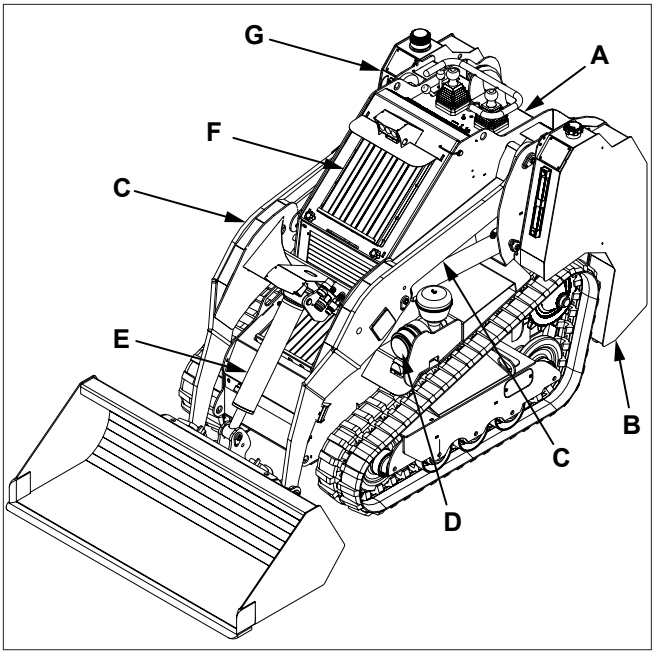

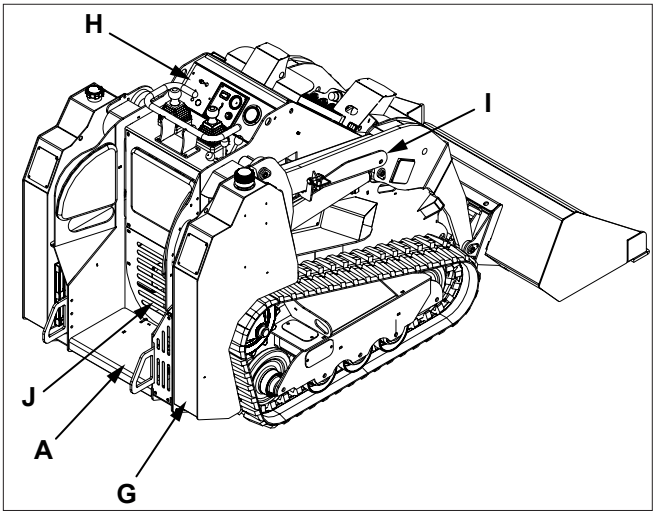

A. Operators Station
B. Diesel Fuel Tank
C. Lift Arm
D. Engine Air Filter
E. Attachment Tilt Cylinder
F. Hydraulic Cooler Vent Screen
G. Hydraulic Fluid Tank
H. Instrument Panel
I. Lift Arm Lock
J. Engine Radiator Intake

1.4 Serial Number Plate

Record serial number and dates in spaces below.

Serial Number:_____

Date Of Purchase:_____

1.5 Operator Orientation

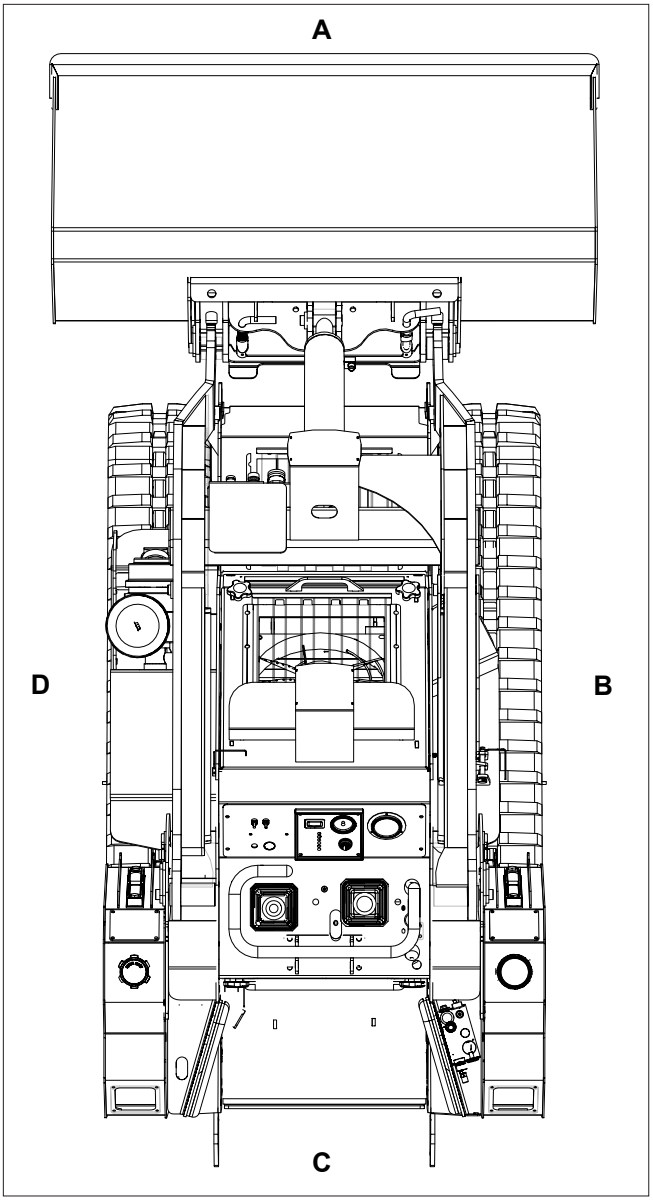

A. Front
B. Right Side
C. Rear
D. Left Side

1.6 OEM Engine

Detailed engine information and warranty can be found in the Kubota engine manual provided with the skidsteer.

The basic engine warranty is as follows:

- Engine is covered for 2 years from date of original purchase, or 2000 hours, whichever occurs first.
- Radiator, engine isolation mounts, muffler and drive couplings are not part of the Kubota warranty, but are covered by their manufacturer for 1 year. Any non Kubota supplied parts are not part of the Kubota warranty and would be covered based on that particular supplier's warranty policies.
- While the engine is under warranty, all claims must be approved by an authorized Kubota Industrial Engine Distributor or a Kubota Full Service Dealer before any work is started. Warranty claims without proper authorization will be denied.

Authorized Kubota Industrial Engine Distributors can be found at www.kubotaengine.com, by calling 1-800-532-9808 or by contacting:

Kubota Engine America Corporation
505 Schelter Road
Lincolnshire, IL 60069

2 SAFETY

2.1 Safety Alert Symbol And Safety Words

You must read, understand and follow the instructions given by the operating unit manufacturers, as well as the instructions in this manual.

The safety information in this manual is denoted by the safety alert symbol:

This symbol means ATTENTION! BECOME ALERT! YOUR SAFETY IS INVOLVED!

The level of risk is indicated by the following signal words:

DANGER

DANGER - Indicates a hazardous situation, which, if not avoided, WILL result in death or serious injury.

WARNING

WARNING - Indicates a hazardous situation, which, if not avoided, could result in death or serious injury.

CAUTION

CAUTION - Indicates a hazardous situation, which, if not avoided, could result in minor or moderate injury.

NOTICE

NOTICE - Indicates a situation that could result in damage to the equipment or other property.

2.2 Operational Hazards

WARNING

Prevent death or serious injury.

Read and understand this manual before operating the skidsteer.

Always stop engine and remove key before leaving operators station.

Never allow anyone near the skidsteer during operation.

Travel at a safe speed.

WARNING

Prevent death or serious injury from moving parts.

Moving parts can crush and dismember.

Do not operate without guards and shields in place.

Disconnect and lockout power source before adjusting or servicing.

WARNING

Use skidsteer only for the designed applications.

Any other use may result in personal injury, damage to equipment and may void the warranty.

WARNING

Protect from flying debris.

Wear proper safety glasses, goggles, or a face shield to protect from flying debris.

WARNING

Prevent death or serious injury.

Raised unsupported lift arms can fall, resulting in death or serious injury.

Never enter the area under raised lift arms.

Carefully read all safety messages in this manual and on equipment safety signs. Keep safety signs in good condition and replace missing or damaged safety signs.

New components and repair parts must include the current safety decal.

Learn how to properly operate the skidsteer. NEVER operate or work around this equipment without proper instruction, while fatigued or under the influence of alcohol, prescription or non-prescription medication or if feeling ill.

Keep your equipment in proper working condition. Know the regulations and laws that apply to you and your industry. This manual is not to replace any regulations or laws. Additional information may be found at: www.asae.org or www.osha.gov.

If you do not understand any part of this manual, contact your Baumalight dealer.

Electric Lines And Underground Utilities

Have underground utilities located before beginning work. In the US or Canada, call 811 (US) or 888-258-0808 (US and Canada). Also contact any local utilities that do not participate in the One-Call service. In countries that do not have a One-Call service, contact all local utility companies to have underground utilities located.

WARNING

Prevent electrocution.

Skidsteer and/or attachment coming near or contacting electrical lines can cause electrocution.

Electrocution can occur without contact.

Keep away from electrical lines.

The following shall be adhered to when working around electrical lines.

- Any electrical line or overhead line shall be considered to be an energized electrical line unless and until the person owning the line or the electric utility authority indicates that the line is not an energized electrical line.
- If any part of the skidsteer or the attachment contacts an energized electrical line, the operator must not attempt to get off the skidsteer. Warn others to leave the area. Contact utility company to deenergize the line. The operator shall remain at the controls until utility company informs that it is safe to exit the machine.
- Do not return to job site or allow anyone into area until utility company informs that it is safe to do so.

⚠ WARNING

Prevent explosion.

Skidsteer and/or attachment contacting a gas line can result in an explosion.

If you suspect a gas line has been damaged:

- Immediately shut off engine.
- Remove any ignition sources.
- Warn others that a gas line has been damaged and that they should leave the area.
- Leave the area as quickly as possible.
- Immediately call the local emergency phone number and the utility company.
- Do not return to area until given permission by emergency personnel and utility company.

Prepare For Emergencies

Be prepared in case of emergencies.

Keep a fire extinguisher and first aid kit close to the machine.

Keep emergency phone numbers in your phone.

Know your address so emergency services can locate you if an emergency arises.

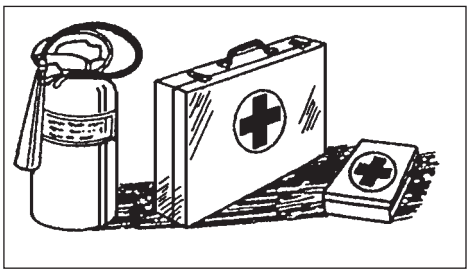

Replace Safety Signs

Replace missing or damaged safety signs.

Safety signs are identified in Section 3 of this manual.

Replacement safety signs are available from your Baumalight dealer.

Do Not Allow Riders

NEVER lift or carry anyone on the skidsteer.

NEVER use skidsteer as a work platform.

NEVER allow passengers on the skidsteer.

Lower Operating Speed

Move at slow speeds on rough or uneven terrain.

Avoid Rollover

The equipment may rollover, resulting in death or serious injury. To help prevent rollover:

- Travel at a slow speed.
- Avoid sharp turns & sudden movement on slopes.
- Carry attachments close to the ground.
- Avoid holes, ditches and other obstructions which may cause equipment to rollover.
- Use caution when operating on slopes and do not operate on excessively steep slopes.
- Do not exceed load capacity of equipment.

Raised Attachment

WARNING

Crushing hazard.

Raised unsupported lift arms can fall, resulting in death or serious injury.

Never enter the area under raised lift arms.

Raised lift arms or attachment can lower unexpectedly, resulting in death or serious injury.

NEVER enter area under raised lift arms or attachment.

Lower lift arms to ground, engage park brake, shut off engine and remove key before servicing.

Avoid Loud Noise

WARNING

Prolonged exposure to loud noise can cause impairment or loss of hearing.

Wear a suitable hearing protective device such as earmuffs or earplugs to protect against objectionable or uncomfortable loud noises.

Hazards From Modifying Equipment

Do not make any alterations to your skidsteer. Altering the equipment may cause unsafe conditions and may void the manufacturer's warranty.

Avoid High Pressure Fluids

WARNING

Pressurized fluids can penetrate the skin.

Hydraulic hoses can fail from age, damage and exposure.

Use body and face protection while searching for leaks. A tiny, almost invisible leak can penetrate the skin, thereby requiring immediate medical attention.

Use wood or cardboard to detect hydraulic leaks, never use your hands.

Escaping fluid under pressure can penetrate the skin causing serious injury.

Prevent the hazard by relieving pressure before connecting or disconnecting hydraulic hoses. Verify all connections are tight before applying pressure.

Search for leaks with a piece of cardboard or wood. Protect hands and body from high pressure fluids. If an accident occurs, see a doctor immediately. Any fluid injected into the skin must be surgically removed within a few hours or serious infection may result.

2.3 Maintenance Hazards

Before servicing, park machine on a firm and level surface, lower lift arms, engage park brake, remove key and place a “Do Not Operate” tag on control panel. Read and understand this manual.

If you do not understand any part of the manual, contact your Baumalight dealer.

Always wear face and/or eye protection, safety shoes, and other protective equipment appropriate for the job.

Do not make unauthorized modifications. Contact your Baumalight dealer before you weld, cut/drill holes, or make any other modifications.

WARNING

Moving parts can crush and cut.

Keep clear of moving components.

Follow lockout procedure before servicing.

WARNING

Entanglement hazard.

Keep clear of moving components.

Wear proper protective equipment appropriate for the job.

WARNING

Prevent death or serious injury.

Before performing inspections, service or maintenance:

- **Park machine on firm, level surface.**
- **Lower lift arms to ground.**
- **Engage park brake.**
- **Turn engine off and remove key.**
- **Place “Do Not Operate” tag on control panel.**

WARNING

Burn hazard.

Hot and high pressure hydraulic oil.

Allow oil to cool before servicing.

WARNING

Crushing hazard.

Raised unsupported lift arms can fall, resulting in death or serious injury.

Never enter the area under raised lift arms.

3 SAFETY SIGNS

The two and four panel safety decals are pictorial and have a yellow background. The panel with a triangle indicates the potential hazard. The panel without a triangle indicates how to avoid the hazard.

If any of the decals are missing, are damaged, or if you do not understand the decal, please contact your dealer.

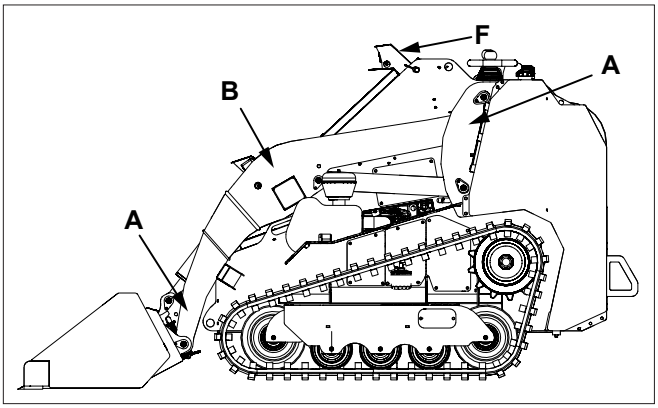

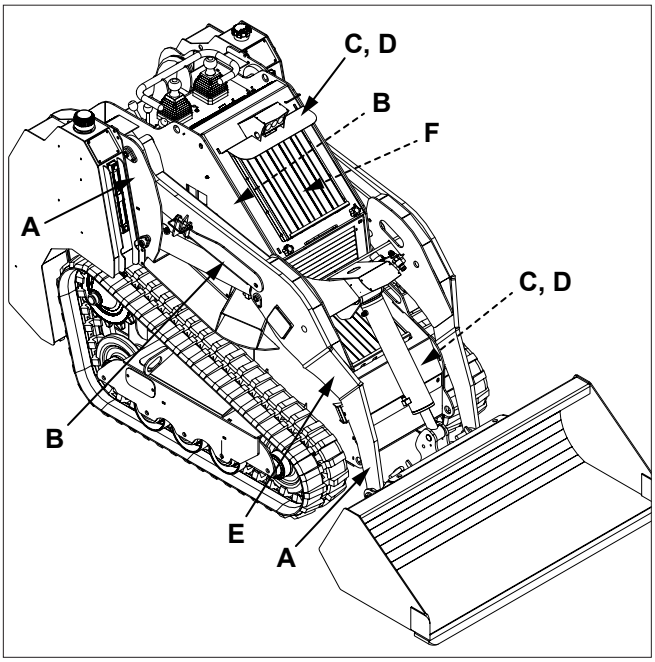

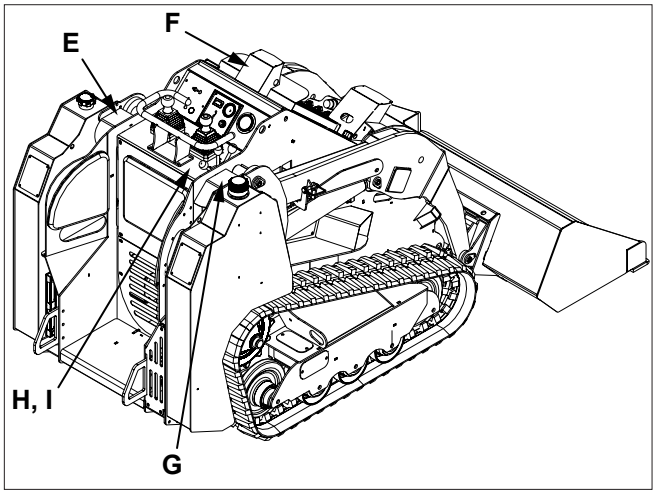

A. D005039 ⚠ WARNING - Pinch point / crush hazard. Do not reach into machine. Keep away from machine.

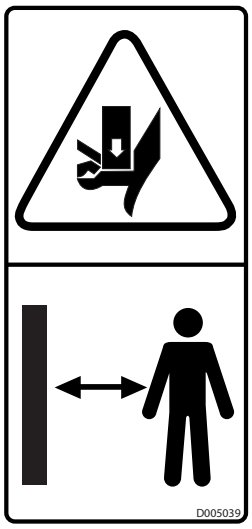

B. D005038 ⚠ WARNING - Crush hazard. Install service lock.

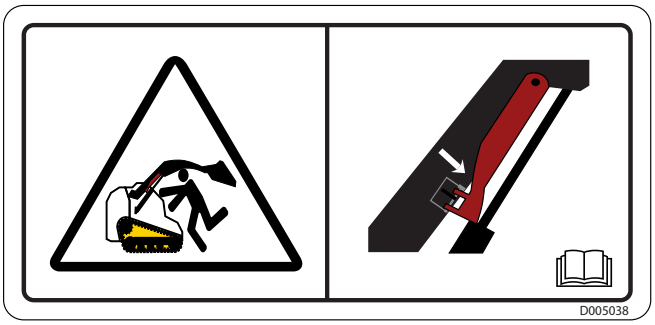

C. D005262 ⚠ WARNING - P65 warning information.

⚠ **WARNING:** This product can expose you to chemicals including 1,3-Butadiene and lead, which are known to the state of California to cause cancer and birth defects or other reproductive harm. For more information go to www.P65Warnings.ca.gov.

D005262

D. D005030 ⚠ WARNING - Pressurized fluid hazard. Keep away from machine.

E. D005029 ⚠ WARNING - Read and understand safety signs on the machine and operating instructions in this manual before operating machine.

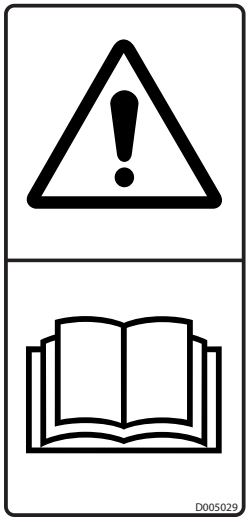

F. D005031 ⚠ WARNING - Wear personal protective equipment appropriate for the job.

G. D005522 ⚠ WARNING - Remove key before performing service.

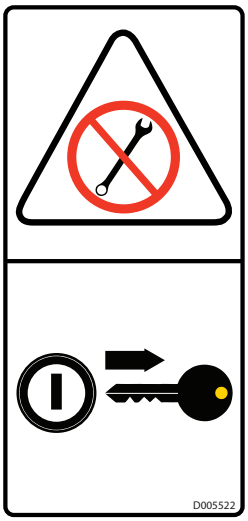

H. D005942 ⚠ WARNING - Do not drive or reverse at high speeds with a raised boom, make sure to lower the boom when picking up speed.

I. D005943 ⚠ WARNING - Do not reverse downhill or drive uphill. Drive downhill and reverse uphill.

4 OPERATION

4.1 Preparation For Use

Operator must be properly trained and understand operator's manual before using equipment. Do not allow untrained or unqualified people to operate this equipment.

It is your responsibility to operate this equipment safely. You must be familiar with the equipment and all safety practices before use.

Have underground utilities located before working. In the US or Canada, call 811 (US) or 888-258-0808 (US and Canada). In countries that do not have a One-Call service, contact all local utility companies to have underground utilities located.

Inspect equipment before operating. Repair or replace any worn or damaged parts. Replace missing or damaged safety shields and safety signs.

Keep bystanders away from work area.

Always wear protective equipment appropriate for the job.

Do not operate, work on or around this machine while under the influence of alcohol, drugs or if feeling ill.

Keep clear of moving equipment at all times.

Stop engine before leaving operators station.

4.2 Utility Locating

Electrical Line

Have underground utilities located before beginning work. In the US or Canada, call 811 (US) or 888-258-0808 (US and Canada). In countries that do not have a one call service, contact all local utility companies to have underground utilities located.

⚠ WARNING

Prevent electrocution.

Skidsteer and/or attachment coming near or contacting electrical lines can cause electrocution.

Electrocution can occur without contact.

Keep away from electrical lines.

The following requirements shall be adhered to when working around electrical lines.

- Any electrical line or overhead line shall be considered to be an energized line unless and until the person owning the line or the electrical utility authority indicates that the line is not an energized electrical line.
- If any part of the skidsteer or the attachment contacts an energized electric line, the operator must not attempt to get off the skidsteer. Contact utility company to deenergize the line. The operator shall remain at the controls until utility company informs that it is safe to exit the machine.
- If any part of the skidsteer or the attachment contacts an energized electrical line, warn others to leave the area. Do not return to jobsite or allow anyone into area until utility company informs that it is safe to do so.

Gas Line

Have underground utilities located before beginning work. In the US or Canada, call 811 (US) or 888-258-0808 (US and Canada). In countries that do not have a one call service, contact all local utility companies to have underground utilities located.

WARNING

Prevent explosion.

Skidsteer and/or attachment contacting a gas line can result in an explosion.

If you suspect a gas line has been damaged, take the following actions.

- Immediately shut off engine.
- Remove any ignition sources.
- Warn others that a gas line has been cut and that they should leave the area.
- Leave the area as quickly as possible.
- Immediately call the local emergency phone number and the utility company.
- Do not return to area until given permission by emergency personnel and utility company.

4.3 Before Operation

Before operating, check fuel level, engine oil level, engine coolant level and hydraulic fluid level. Test operation of operator on board switch.

WARNING

Prevent explosion.

Diesel fuel can cause an explosion or fire. Do not refuel with engine running or near open fire. Never allow fuel, engine oil or hydraulic fluid to spill on hot machine components.

Clean up spilled fuel or oils immediately.

Test Operator On Board Safety Switch

Before operation, test operator on board safety switch to verify it is functioning correctly.

1. Stand on operators platform and start engine. Do not disengage park brake.
2. Step off operators platform. The drive and boom functions should be disabled if functioning correctly. If drive and boom functions are not disabled, switch engine off and contact a Baumalight dealer. Do not operate skidsteer if operator on board switch is not functioning correctly.

Fill Fuel Tank

1. Skidsteer must be parked on a level surface, lift arms fully lowered, engine stopped and key removed.

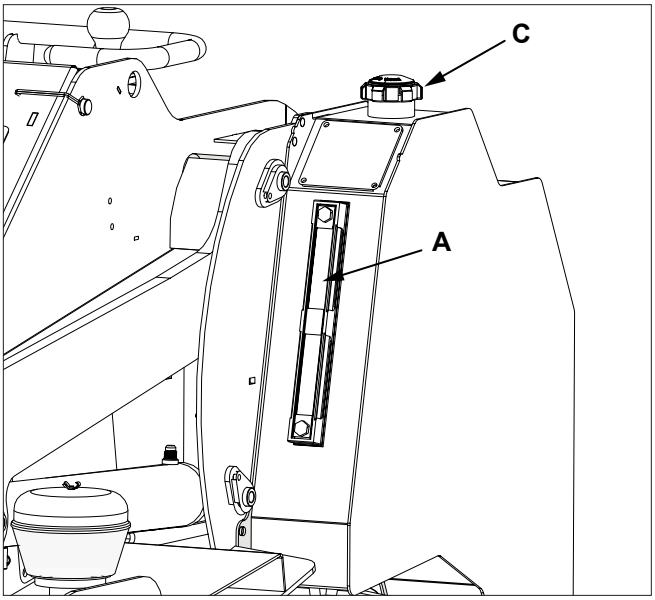

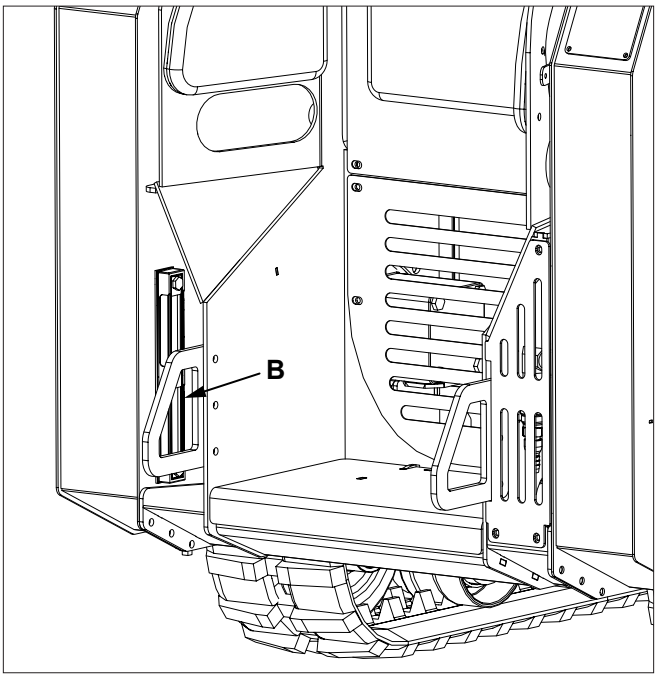

2. Check fuel level in upper level sight glass (A) and lower level sight glass (B).
3. Clean area around fuel tank filler neck.
4. Remove cap (C) from filler neck and add diesel fuel as needed.
5. Install cap (C) on filler neck.

Check Engine Oil Level

1. Skidsteer must be parked on a level surface, lift arms fully lowered, engine stopped and key removed.
2. Loosen knobs (A) and tilt hydraulic cooler up. Engage pin to hold cooler in open position.

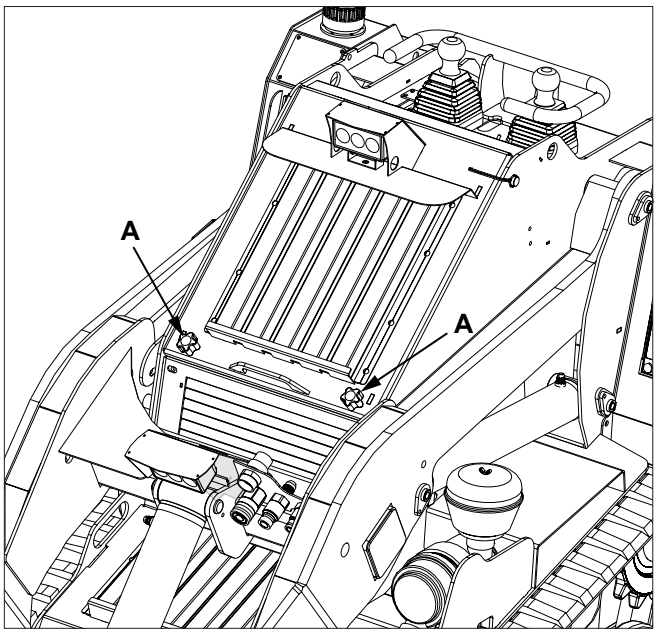

3. Clean around oil dipstick (B).
4. Pull out dipstick and wipe metal end clean.
5. Slide dipstick fully into dipstick tube.
6. Pull dipstick out and look at metal end.
7. If oil level is low, clean around oil filler cap and remove cap (C).

Use 15W-40 T4, T5 or T6 Synthetic Blend motor oil.

8. Slowly pour oil into the valve cover to raise oil level to the F (full) mark.

NOTICE
Prevent engine damage. **Do not overfill crankcase.**

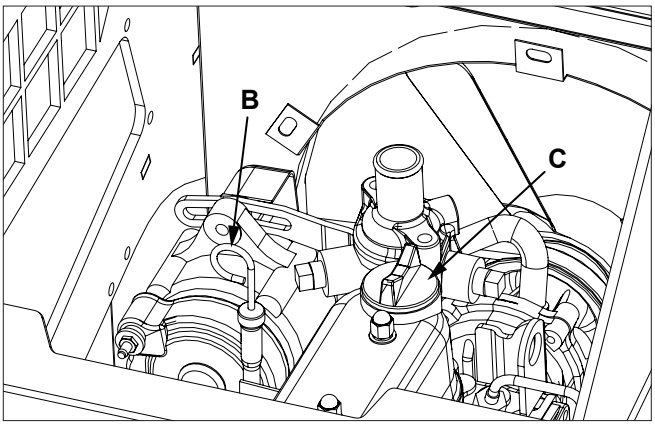

9. Replace filler cap and dipstick.

10. Close hydraulic cooler and tighten knobs (A).

Check Hydraulic Fluid Level

Check hydraulic fluid level before the engine is first started and every 10 hours. See below for recommended hydraulic fluid.

AW46: 32° to 95° F (0° to +35° C)
AW32: 14° to 68° F (-10° to +20° C)
MV22: -47° to 77° F (-44° to +25° C)

Attachments can raise or lower the hydraulic fluid level. If a new attachment is connected, hydraulic fluid needed to fill the lines, cylinders or motor will lower the hydraulic tank fluid level. Check fluid level each time a different attachment is connected.

1. Skidsteer must be parked on a level surface, lift arms fully lowered, engine stopped and key removed.

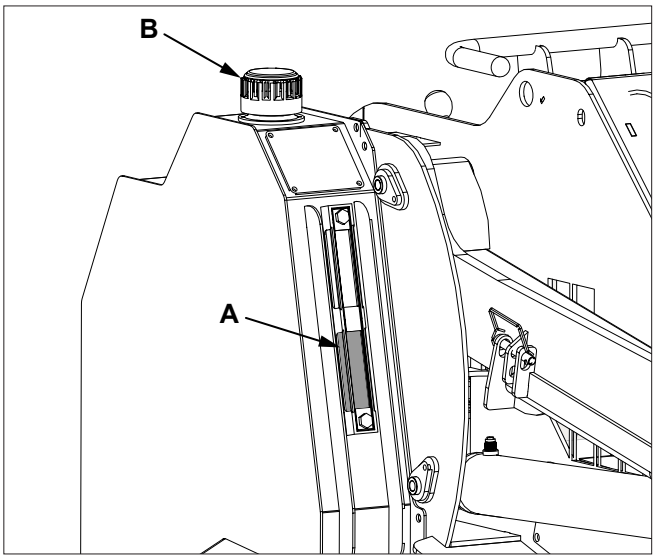

2. Check fluid level in sight glass (A). Hydraulic fluid should fill approximately 50% of the sight glass. If the level is low, add enough fluid to raise it to the proper level.

3. Clean the area around the filler neck of the hydraulic tank.

4. Remove the cap (B) from filler neck and add hydraulic fluid as needed.

5. Install the cap (B) on filler neck.

Check Engine Coolant Level

1. Skidsteer must be parked on a level surface, lift arms fully lowered, engine stopped and key removed.
2. Loosen knobs (A) and tilt hydraulic cooler up. Engage pin to hold cooler in open position.

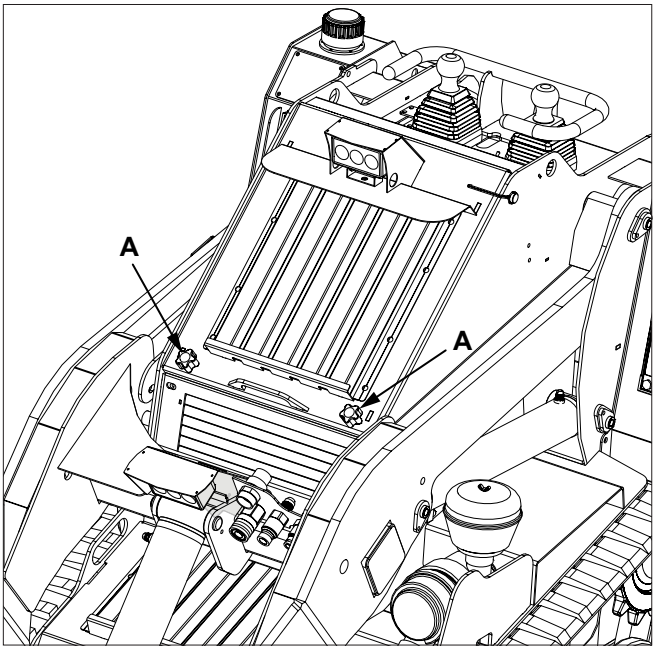

Note: *Expansion tank is mounted above the engine radiator.*

3. Check coolant level in expansion tank. Coolant should be between indicator marks (B).
4. If coolant level is low, remove expansion tank cap (C).
5. If expansion tank is empty, check coolant level in radiator.
6. Lift tank approximately 1 in. (25 mm) and remove from skidsteer.

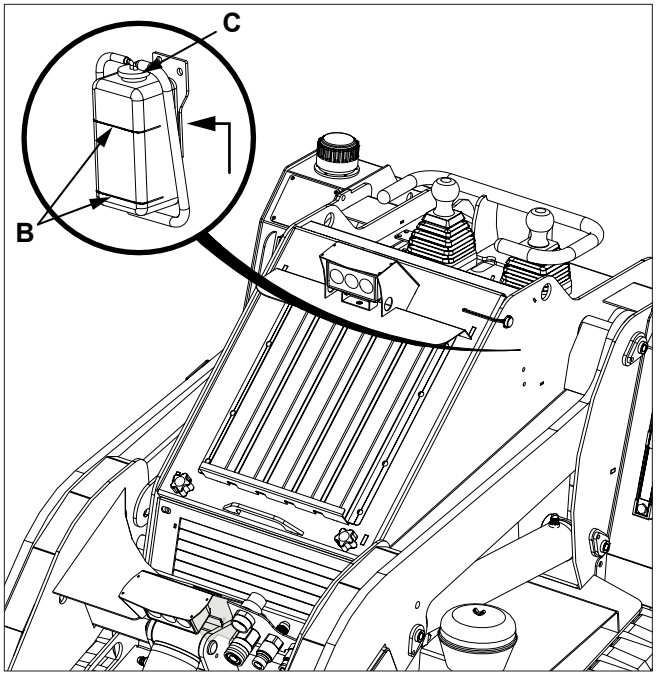

7. Add a premixed coolant or a 50/50 mix of water and anti-freeze to proper level.
8. Install tank and cap.
9. Close hydraulic cooler.

4.4 Machine Controls

Skidsteers Equipped With Analog Control Panel

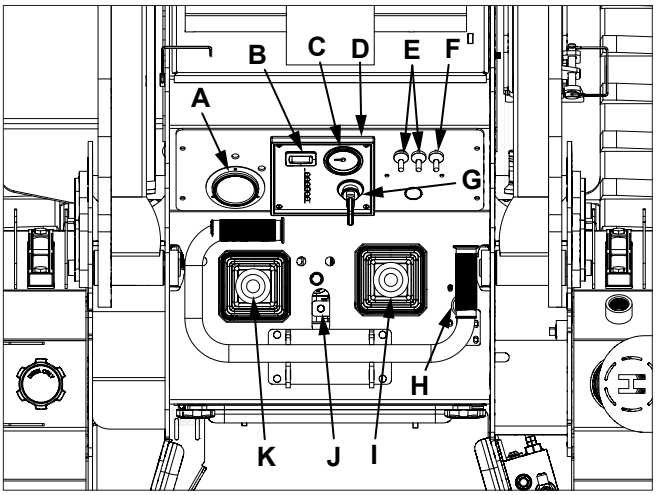

A. Hydraulic Fluid Pressure
B. Hour Meter
C. Engine Tachometer
D. Engine Control Panel
E. Lights
F. Park Brake On/Off
G. Two-Speed Control - TRL536D And TRL630D
H. Ignition Switch
I. Engine Throttle
J. Boom Joystick
K. Auxiliary Hydraulic Control
L. Drive Joystick

Skidsteers Equipped With Digital Control Panel

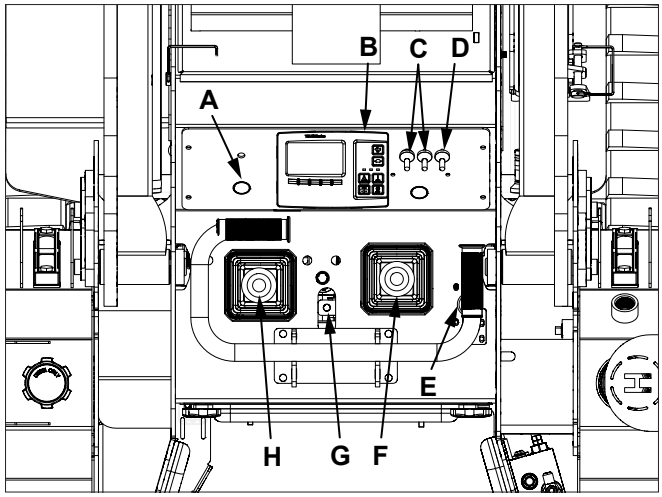

A. Display Power Switch
B. Engine Control Panel
C. Lights
D. Park Brake On/Off
E. Engine Throttle
F. Boom Joystick
G. Auxiliary Hydraulic Control
H. Drive Joystick

Digital Control Panel - With Engine Off

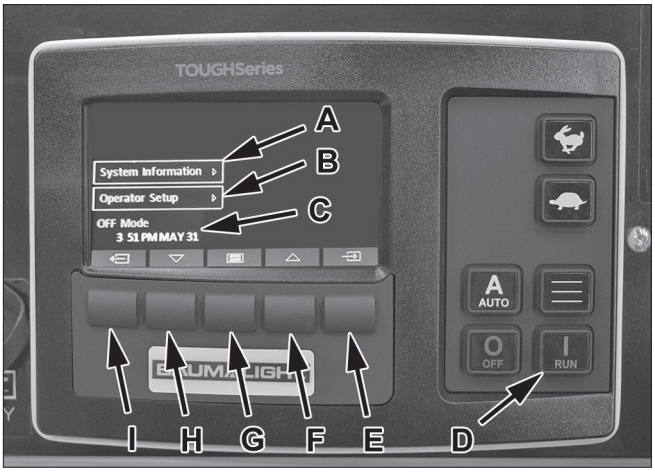

Note: *The auto button is not functional in this application.*

A. System Information - Press to view firmware version, serial number and events log.
B. Operator Setup - Press to view/edit display options,date and time settings.
C. Date Stamp.
D. Run - Press to start engine.
E. Enter Key/Select.
F. Scroll Up - Press to scroll up the menu.
G. Enter Settings Menu.
H. Scroll Down - Press to scroll down the menu.
I. Back Key - Press to go back one function.

Digital Control Panel - With Engine On

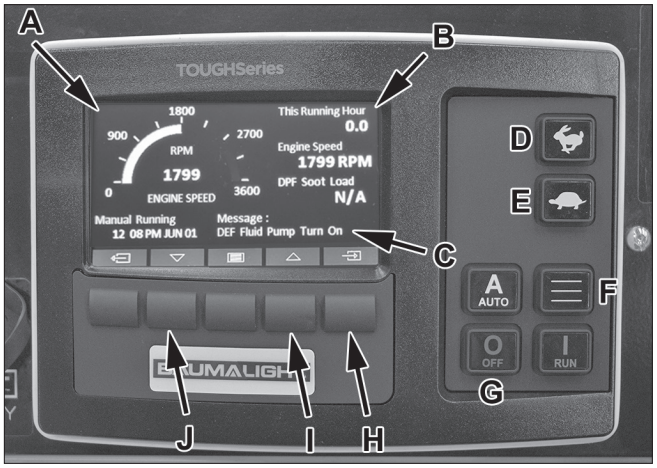

Note: *The auto button is not functional in this application. The rabbit/turtle buttons D and E are functional on the TRL536D and TRL630D only.*

A. Engine RPM
B. Scrolling Engine Parameters
C. Event Message
D. Two-Speed - Press to select high speed.
E. Two-Speed - Press to select low speed.
F. Display Toggle - Press to show only the battery voltage, engine temperature and hydraulic oil temperature. Press H to continue scrolling.
G. Off - Press to stop engine.
H. Lock/Auto Scrolling Parameters (Changes back to show all parameters).
I. Scroll Up - Press to scroll up the engine parameters.
J. Scroll Down - Press to scroll down the engine parameters.

Engine Throttle

Move the control rearward to increase the engine speed and forward to decrease speed.

Park Brake

Move switch forward to engage the park brake. Move switch rearward to release park brake.

Drive Joystick

It is recommended to make gradual sweeping turns.

Push joystick forward (A) to move skidsteer forward.

Pull joystick rearward (C) to move skidsteer rearward.

For gradual turns, push joystick forward/left or forward/right and skidsteer will slowly turn left or right. Pull rearward for reverse.

For tight turns, move joystick closer to right (B) or left (D) but never straight to (B) or (D) as there is a neutral zone to protect the engine from stalling on a surface with excessive traction.

Full throttle may be desired for experienced operators; inexperienced operators should not try to make tight turns.

The further you move the joystick in any direction, the faster the skidsteer will move in that direction.

Release joystick or move to the center neutral position to stop movement.

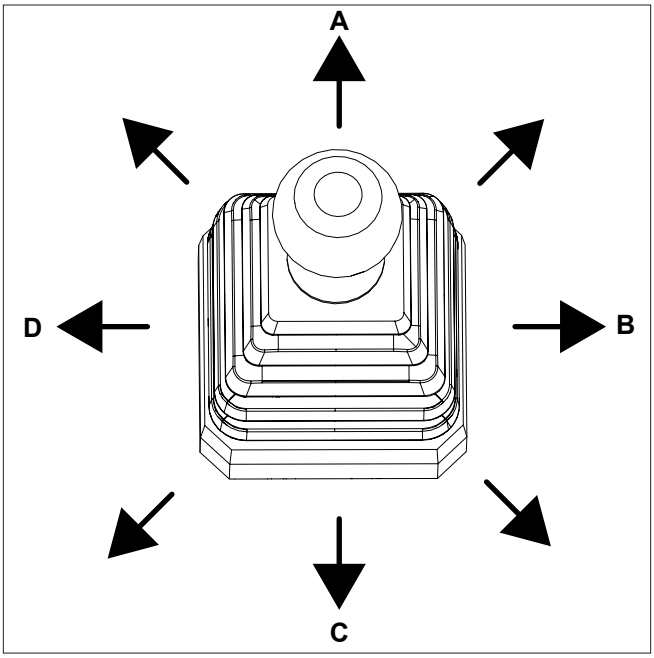

Boom Joystick

Move joystick forward (A) to lower lift arms.

Move joystick to the right (B) to tilt attachment forward.

Move joystick rearward (C) to raise lift arms.

Move joystick to the left (D) to tilt attachment back.

Push joystick fully forward into detent position (E) to allow a bucket or blade to follow the contour of the ground.

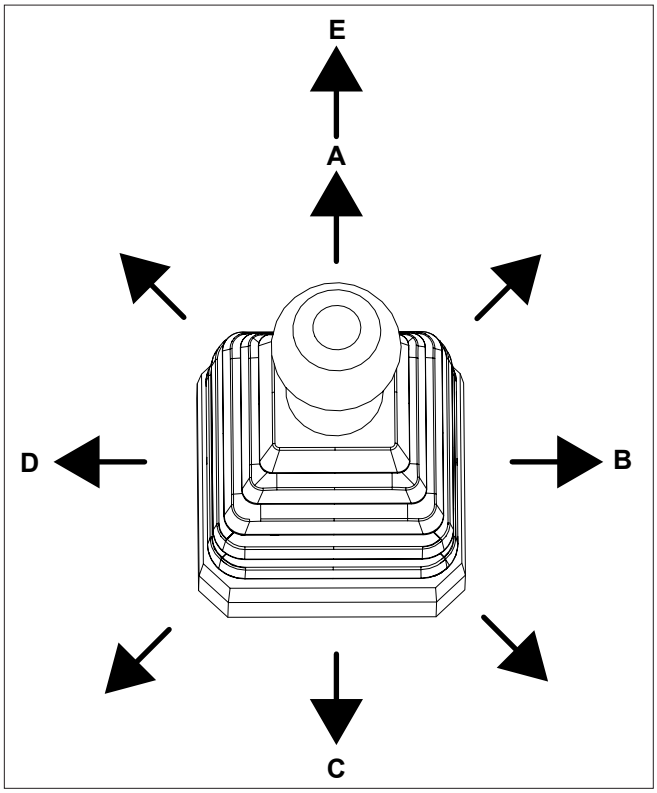

Key Switch

Key switch has three positions: off, run, and start.

Rotate the key to the start position to start engine (Lofa control panels only).

Release key when engine starts and it will move automatically to the run position (Lofa control panels only).

Rotate key to off position to stop engine.

Auxiliary Hydraulic Control

Auxiliary hydraulic control (I) provides a continuous hydraulic flow to attachment. Center position is off/locked. Move control forward for flow in one direction or rearward for flow in the other direction.

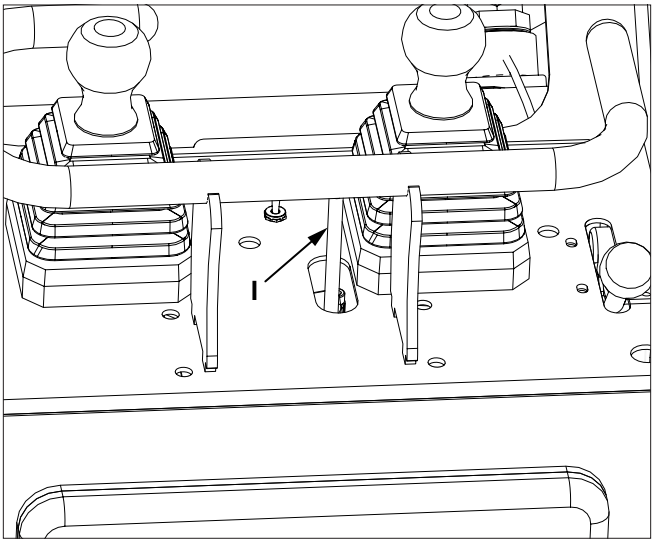

Engine Preheat

Engine preheat is automatically controlled by the engine control panel.

4.5 Start And Stop Engine

Refer to OEM engine manual for detailed instructions.

⚠ WARNING

Carbon monoxide hazard.

Always start and operate the engine in a well-ventilated area.

If in an enclosed area, vent the exhaust to the outside.

For more information go to www.P65Warnings.ca.gov.

Start Engine - Above 40° F (4° C)

1. Verify all controls are in neutral.
2. Move throttle lever to low-medium position.
3. Lofa Control Panel - Turn ignition switch to start position until engine starts. Release ignition switch when engine starts.

   Digital Control Panel - Move display power switch to on position. Press run button once, engine automatically preheats (if programmed) and then starts right after. If the engine doesn't start within 5 seconds of cranking, it will rest and retry. Three no start attempts would result in a crank failure.
4. Allow engine to run for 5 minutes to warm up.
5. Increase engine speed to desired setting.

Start Engine - Below 40° F (4° C)

Note: *This start procedure is for skidsteers equipped with Lofa engine control panels. Skidsteers equipped with digital control panels use the Start Engine - Above 40° F (4° C) regardless of ambient temperature.*

1. Verify all controls are in neutral.
2. Move throttle lever to medium position.

Note: *Attempting to start a cold engine while standing on operators platform will draw more battery power since the drive and boom functions are enabled.*

3. While standing off of operators platform, turn ignition switch to run position for approximately 8 seconds to activate pre-heat.
4. When pre-heat lamp goes off, turn ignition switch to off.
5. Turn and hold ignition switch in the start position to begin cranking engine over. Never hold ignition switch in the start position for longer than 8-10 seconds. Engine should begin to run after about 3 seconds.
6. Release ignition when engine begins to run. If engine stalls, turn and hold ignition switch in the start position again to re-start.

NOTICE

Prevent engine damage.

Do not turn ignition switch in the start position while engine is running or sputtering during a cold startup.

If engine stalls a few times after releasing ignition switch, it may help to keep ignition switch in the start position a few seconds longer than normal to help engine along. Release ignition switch when engine starts.

7. Allow engine to run for 5 minutes to warm up.
8. Increase engine speed to desired setting.

Stop Engine

1. Lower lift arms to ground.
2. Move controls to neutral position.
3. Engage park brake.
4. Run engine at low idle for five minutes.
5. Lofa Control Panel - Turn ignition switch to stop engine. Failure to do so will result in draining battery within a few days.

   Digital Control Panel - Press stop button to stop engine. Move display power switch to off position. Failure to do so will result in draining battery within a few days.
6. Remove key.

4.6 Attachments

NOTICE

Use only Baumalight approved attachments.

Attachments can change the stability and the operating characteristics of the skidsteer.

The warranty of the skidsteer may be voided if used with unapproved attachments.

Connect Attachment

1. Before connecting the attachment, verify that the mount plates are free of any dirt or debris and that quick attach pins (A) rotate freely and are in the disengaged position as shown.
2. Start engine.
3. Tilt the mount plate (B) forward.
4. Position mount plate into the upper lip (C) of the attachment receiver plate.

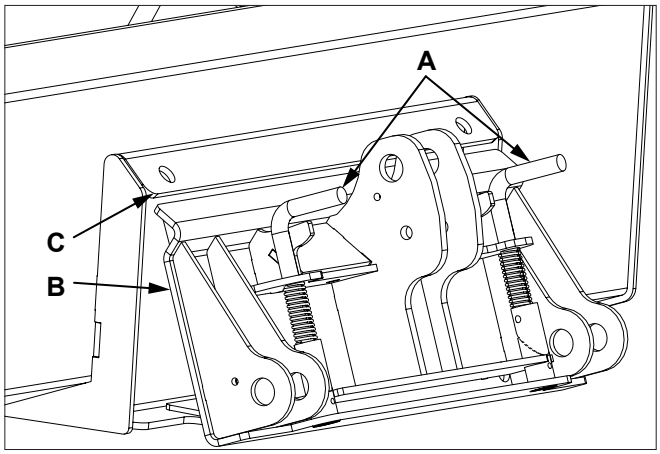

5. Raise the lift arms while tilting back the mount plate at the same time. The attachment should be raised enough to clear the ground, and the mount plate should be tilted all the way back.
6. Engage park brake and stop engine.
7. Engage the quick attach pins (A). Verify that pins are fully seated in the attachment receiver plate (D). If the pins do not rotate to the engaged position, the mount plate is not fully aligned with the holes in the attachment receiver plate. Check the receiver plate and clean it if necessary.

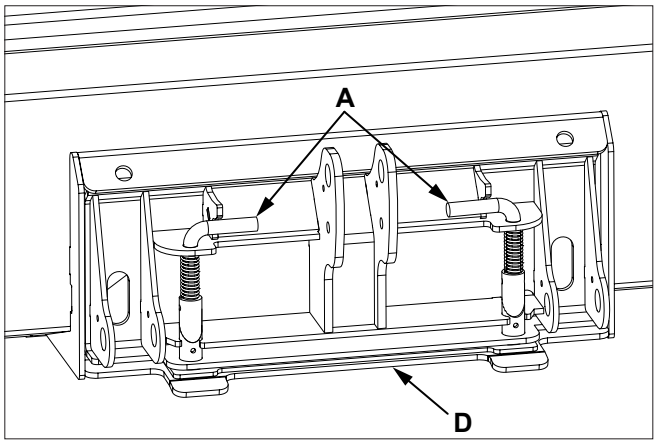

WARNING

Prevent death or serious injury.

Attachment could fall off of the skidsteer if pins are not fully seated through attachment mount plate.

Verify quick attach pins are fully seated in the attachment mount plate.

Connect Hydraulics

WARNING

Pressurized fluids can penetrate the skin.

Hydraulic hoses can fail from age, damage and exposure.

Use body and face protection while searching for leaks. A tiny, almost invisible leak can penetrate the skin, thereby requiring immediate medical attention.

Use wood or cardboard to detect hydraulic leaks, never use your hands.

WARNING

Burn hazard.

Hot and high pressure hydraulic oil.

Allow oil to cool before touching components.

If the attachment requires hydraulics for operation, connect hydraulic hoses as follows:

1. Engage park brake and stop engine.
2. Remove protective covers from hydraulic couplers. Verify that hydraulic connectors are clean.
3. Move auxiliary hydraulic lever into forward detent position and connect male connector into female connector on the skidsteer.
4. Move auxiliary hydraulic lever into rearward detent position and connect female connector onto male connector on the skidsteer.
5. If attachment has a case drain hose, connect hose to case drain coupler on skidsteer.
6. Confirm that connections are secure by pulling on the hoses.

Disconnect Attachment

1. Lower attachment to the ground
2. Engage park brake and stop engine.
3. Disengage quick attach pins by turning them to the outside.
4. If attachment uses hydraulics, move the auxiliary hydraulics lever forward, back and forth, and back to neutral to relieve pressure at hydraulic couplers.
5. If attachment uses hydraulics, disconnect hydraulic couplers.
6. Install protective covers on hydraulic couplers.
7. Start engine, tilt the mount plate forward, and back skidsteer away from the attachment.

4.7 Transporting

WARNING

Prevent serious injury or death.

Do not operate or drive the skidsteer on roadways.

WARNING

Tip over hazard.

When loading onto a trailer, back onto trailer for better weight balance to avoid tip over.

1. Raise attachment slightly off ground.
2. Travel at a reasonable and safe speed.

When transporting the skidsteer on a trailer, use the following procedure:

1. Lower lift as low as possible.
2. Back skidsteer onto trailer.
3. Lower lift arms to trailer deck.
4. Engage park brake and stop engine.
5. Secure skidsteer to trailer with the proper size and load rated tie downs.

4.8 Lift Arm Lock

WARNING

Crushing hazard.

Raised unsupported lift arms can fall, resulting in death or serious injury.

Never enter the area under raised lift arms.

Engage Lift Arm Lock

1. Start engine.
2. Verify the area is clear of bystanders and obstructions, and fully raise lift arms.
3. Engage park brake, shut off engine and remove key.
4. Remove quick lock pin (A) and pivot lift arm lock down until resting on cylinder ram (B).

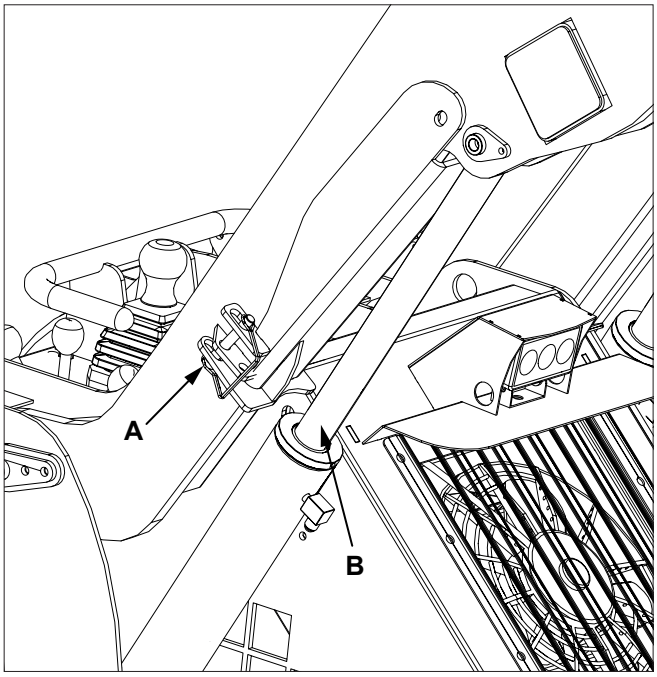

Lift Arm Lock Disengaged

5. Install quick lock pin (A) in lower hole as shown in Lift Arm Lock Engaged illustration.

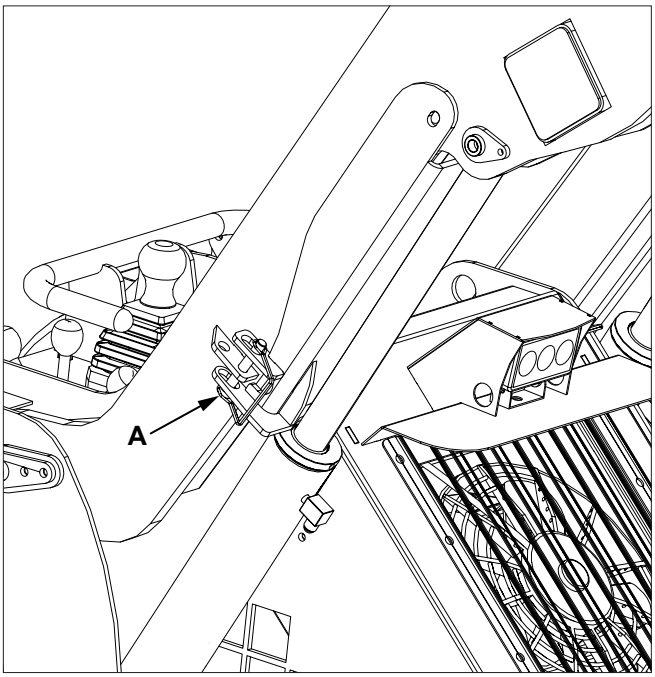

Lift Arm Lock Engaged

6. Lower lift arms until lift arm lock is tight against cylinder barrel.
7. Stop engine and remove key.

Disengage Lift Arm Lock

1. Start engine.
2. Verify the area is clear of bystanders and obstructions.
3. Fully raise lift arms.
4. Shut off engine and remove key.
5. Pivot lift arm lock up and attach to lift arm with quick lock pin (A) in upper hole as shown in Lift Arm Lock Disengaged illustration.
6. Lower lift arms to ground.
7. Shut off engine and remove key.

4.9 First Time User Tips

First, operate all functions in a clear area with throttle at low idle to get a good feel for the controls.

Move the skidsteer slowly until you have a better feel how much the unit can take.

Each operator must experiment to find a technique that works for them in their application.

4.10 Operation

Slope Operation

Operate up and down slopes with the heavy end of the skidsteer uphill. Some attachments, no attachment or an empty bucket will make the rear of the skidsteer the heavy end. A full bucket will make the front of the skidsteer the heavy end.

Most attachments will make the front of skidsteer the heavy end.

Raising lift arms on a slope will affect stability. Keep lift arms in the lowered position when on slopes.

Remove rocks, tree limbs, etc from the work area. Watch for holes, ruts, or bumps.

Attachments will change the stability and the operating characteristics of the skidsteer. Contact your dealer to verify attachment is compatible with your skidsteer.

Do not make sudden changes in speed or direction.

Avoid starting or stopping on a slope. If the skidsteer loses traction, slowly move straight down the slope. Avoid turning on slopes. If turning is necessary, turn slowly and keep the heavy end of the skidsteer uphill.

Do not operate near drop off or ditches.

When parking on a hillside or slope, lower attachment to the ground and engage park brake.

General Operation

1. Start engine.
2. Disengage park brake.
3. Pull joystick to raise attachment slightly off the ground.
4. Move throttle to desired position.
5. Operate drive control to move skidsteer.
6. When operation is completed, lower lift arms to place attachment on the ground.
7. Move throttle to low idle position.
8. Engage park brake.
9. Move all controls to neutral position.
10. Allow engine to run for five minutes to cool down.
11. Turn ignition to stop position and remove key.

WARNING

Crush hazard.

Operation on a slope can result in machine tip over.

Carry attachments low and operate with the heavy end uphill.

See Slope Operation in this section.

Two-Speed Operation - TRL536D And TRL630D Only

On skidsteers with an analog control panel, toggle switch on panel to select low speed or high speed. Skidsteer will switch to low speed when the operator steps off the operator platform and when the parking brake is cycled off then on.

On skidsteers with a digital control panel, press turtle button to select low speed or rabbit button to select high speed. Skidsteer will switch to low speed when the operator steps off the operator platform and when the parking brake is cycled off then on.

4.11 Adjust Ground Speed/Drive Power

The ground drive hydraulic pump is factory set to deliver a equal balance between ground speed and drive power. If more speed/less power, or less speed/more power from the factory setting is desired, use the following steps to adjust pump.

⚠ WARNING

Prevent death or serious injury.

Before performing adjustments:

- **Park machine on firm, level surface.**
- **Lower lift arms to ground.**
- **Engage park brake.**
- **Turn engine off and remove key.**
- **Place "Do Not Operate" tag on control panel.**

1. Operate skidsteer to bring hydraulic fluid to normal operating temperature.
2. Lower attachment to the ground.
3. Engage park brake, shut off engine and remove key.
4. Open/remove covers to access hydraulic pump.

Note: *Increasing ground speed will reduce the drive power and may result in the engine stalling under load conditions. Adjust in small increments until desired speed/power is achieved.*

5. Hold hex screw (B) and loosen locknut (A).
6. Hold locknut (A) with wrench and rotate hex screw (B) clockwise to increase ground speed, or counter clockwise to decrease ground speed..
7. Hold hex screw (B) and tighten locknut (A), close/install covers and test operation.

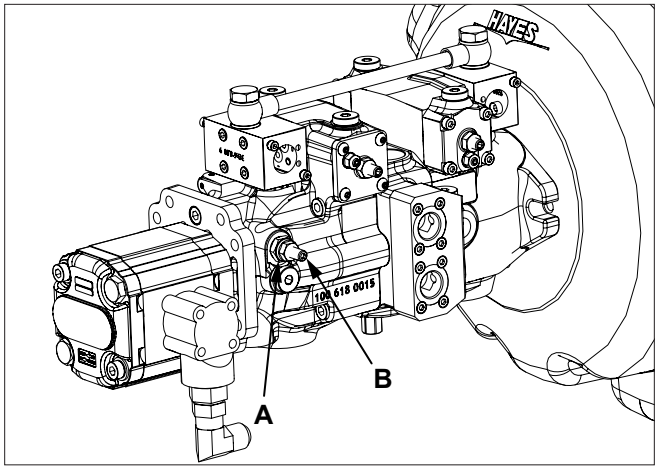

4.12 Adjust Hydraulic Relief Valve

If engine stalls when simultaneously pushing into a pile and raising boom, relief valve may need to be adjusted.

1. Loosen knobs (A) and pivot hydraulic oil cooler upward. Engage pin to hold cooler in open position.

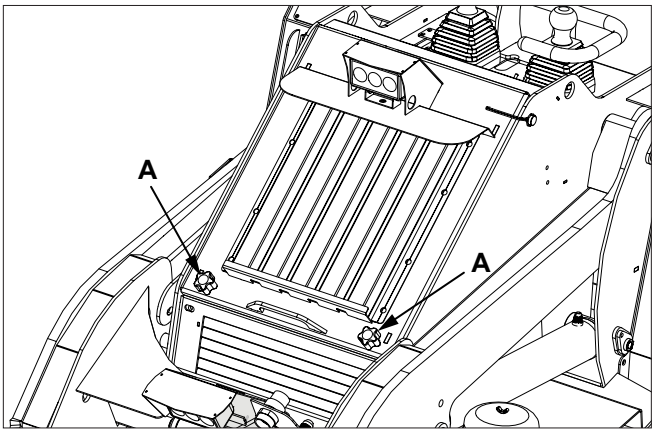

2. Remove access cover on rear of engine compartment and loosen jam nut (B) on boom valve with 17 mm wrench.

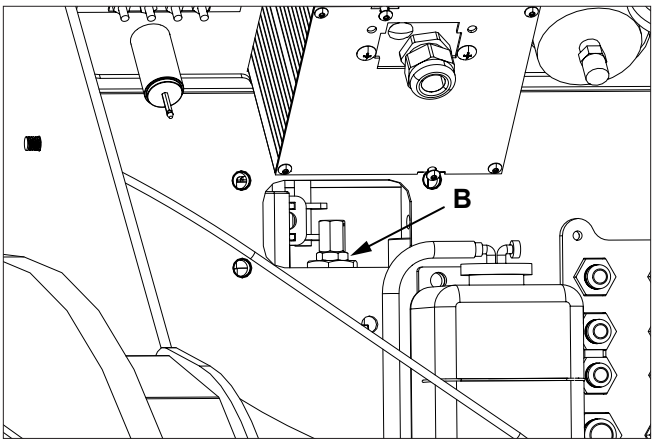

3. Insert 5 mm hex wrench down through access hole (C) on control panel and into hex screw on boom valve.

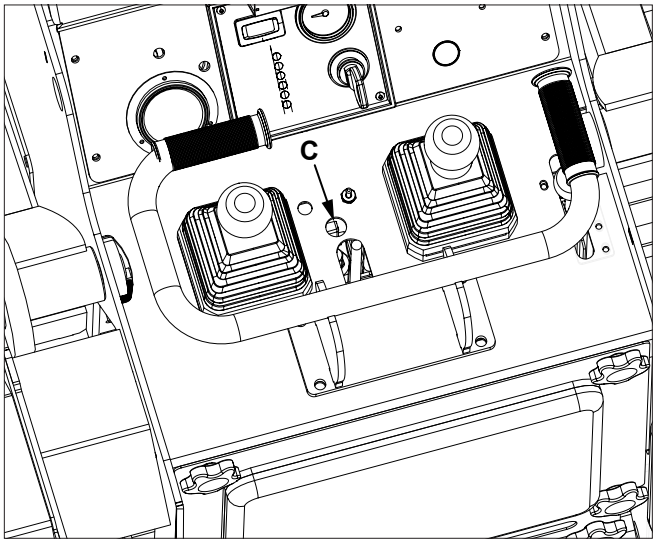

4. Hold locknut (B) with wrench and rotate hex adjustment screw 1/4 turn counter clockwise. Tighten locknut (B), install cover, close oil cooler, start engine and test operation.

5. Repeat step 4 again until engine does not stall when pushing into a pile and raising boom.

6. For using other attachments, you will need to set relief back to 3000 psi for maximum performance for those attachments.

5 SERVICE AND MAINTENANCE

ITEM	Initial 10 Hours	Daily Or 10 Hours	Every 20 Hours	Every 100 Hours	Every 250 Hours	Every 500 Hours	Every 1000 Hours	As Required
Check drive sprocket nut tightness.	●							
Check engine oil level.		●						
Check air filter		●						
Check hydraulic hoses.		●						
Check park brake operation.		●						
Check hydraulic fluid level.		●						
Check coolant level.		●						
Check radiator and intake screen.		●						
Check hydraulic cooler.		●						
Check operator on board switch.		●						
Inspect tracks.		●						
General inspection.		●						
Lubricate quick attach fittings.			●					
Check track tension.				●				
Check fan belt				●				
Replace air filter.				●				
Check drive sprocket nut tightness.				●				
Change engine oil and filter.					●			
Check air intake hoses.					●			
Replace fuel filter.						●		
Replace hydraulic filter.						●		
Change hydraulic fluid and filter.							●	
Check battery.								●
Check/adjust auxiliary hydraulic pressure.								●

5.1 Safety

WARNING

Prevent death or serious injury.

1. **Park machine on firm, level surface.**
2. **Engage park brake.**
3. **Verify all controls are in neutral.**
4. **Stop engine and remove key.**

WARNING

Prevent death or serious injury.

Raised unsupported lift arms can fall, resulting in death or serious injury.

Never enter the area under raised lift arms.

5.2 Initial 10 Hours

1. Check tightness on drive sprocket nut (A). Tighten nut to 1753 lb ft (2377 Nm) of torque.

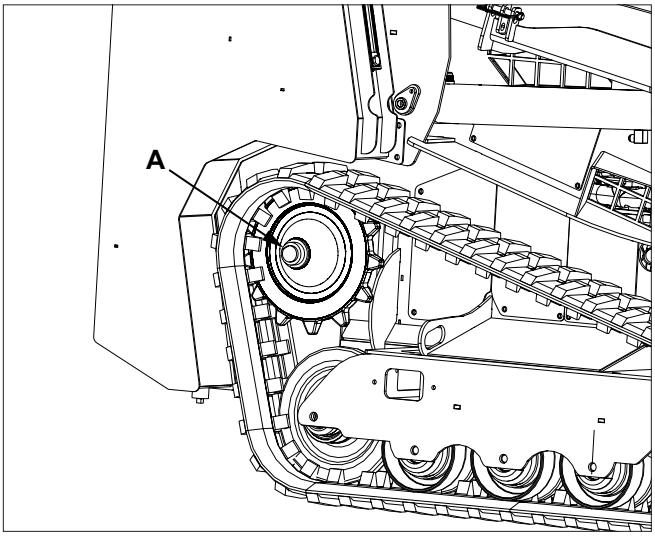

5.3 Daily Or Every 10 Hours

Check Engine Oil Level

1. Skidsteer must be parked on a level surface, park brake engaged, lift arms fully lowered, engine stopped and key removed.
2. Loosen knobs (A) and pivot hydraulic oil cooler upward. Engage pin to hold cooler in open position.

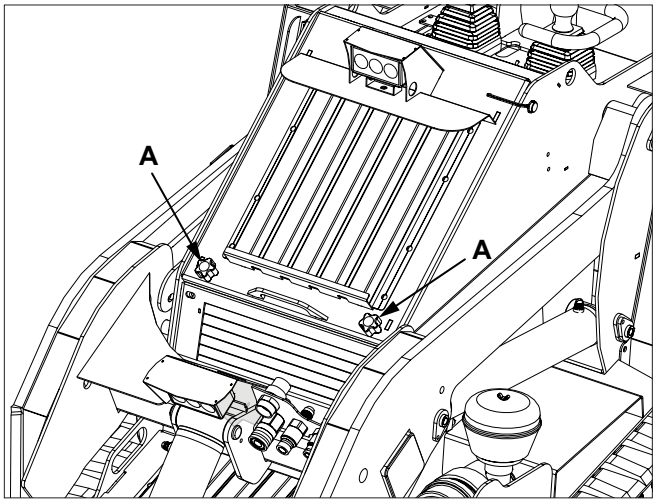

3. Check oil level on dipstick (B). Oil level should be at full mark on dipstick. Add 15W-40 T4, T5 or T6 Synthetic Blend motor oil as necessary through fill port (C) on valve cover.

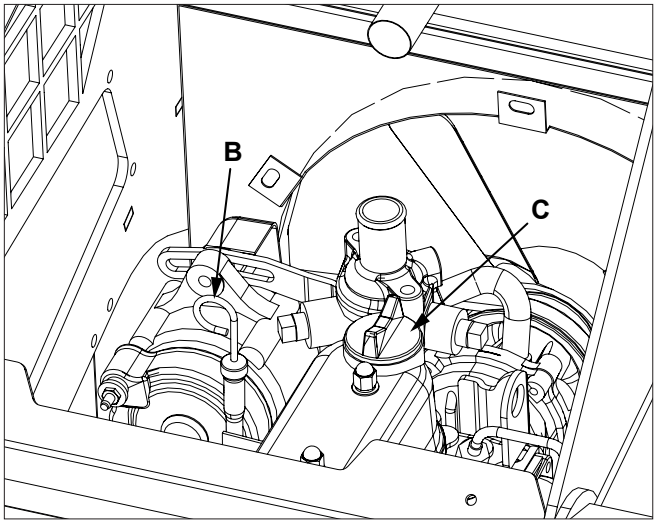

Check Engine Air Filter And Precleaner

Check air filter pre cleaner (A) and air filter (B) before startup and every 10 hours. Remove and clean as needed.

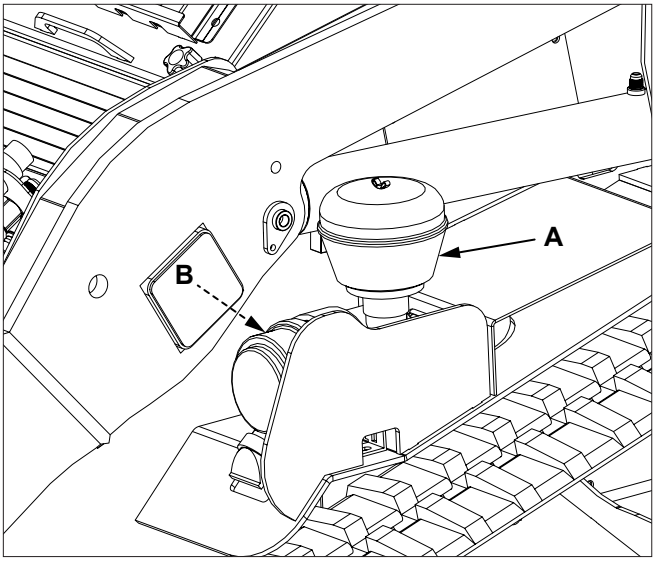

Check Hydraulic Hoses

1. Skidsteer must be parked on a level surface, park brake engaged, lift arms fully lowered, engine stopped and key removed.
2. Check hydraulic hoses for wear and damage before startup and every 10 hours. Replace worn or damaged hoses.

Check Park Brake Operation

Check park brake operation before startup and every 10 hours or more often when conditions warrant.

Check Hydraulic Fluid Level

1. Skidsteer must be parked on a level surface, park brake engaged, lift arms fully lowered, engine stopped and key removed.

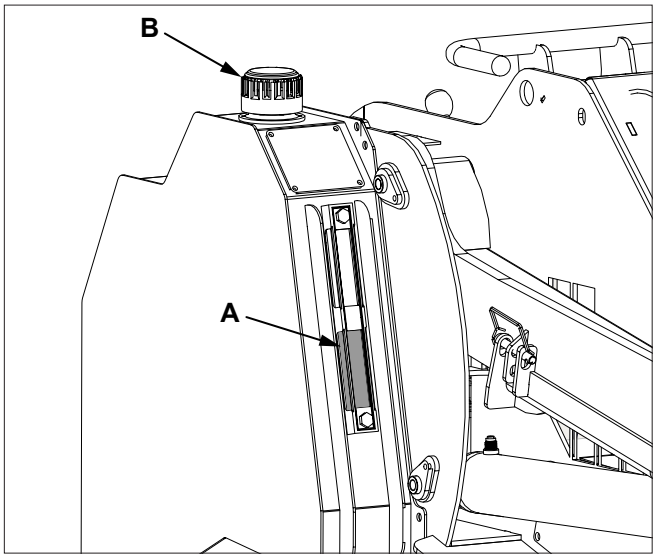

2. Check fluid level in sight glass (A). Hydraulic fluid should fill approximately 50% of the sight glass. If the level is low, add enough fluid to raise it to the proper level. See below for recommended hydraulic fluid.

   AW46: 32° to 95° F (0° to +35° C)
   AW32: 14° to 68° F (-10° to +20° C)
   MV22: -47° to 77° F (-44° to +25° C)
3. Clean the area around the filler neck of the hydraulic tank.
4. Remove the cap (B) from filler neck and add hydraulic fluid as needed.
5. Install the cap (B) on filler neck.

Check Coolant Level

1. Skidsteer must be parked on a level surface, park brake engaged, lift arms fully lowered, engine stopped and key removed. Allow engine to cool to ambient temperature.
2. Loosen knobs (A) and pivot hydraulic oil cooler upward. Engage pin to hold cooler in open position.

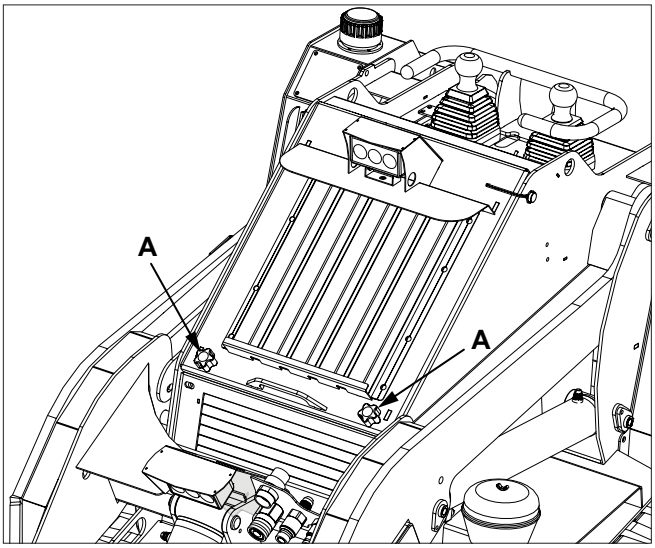

Note: *Expansion tank is mounted above the engine radiator.*

3. Check coolant level in expansion tank. Coolant should be between indicator marks (B).
4. If coolant level is low, remove expansion tank cap (C).
5. Lift tank approximately 1 in. (25 mm) and remove from skidsteer.

Engine Model	Cooling System Capacity
D1005-E4 D1105-E4 D1305-E4	0.82 gal (3.1 L)
V1505-E4	1.06 gal (4.0 L)

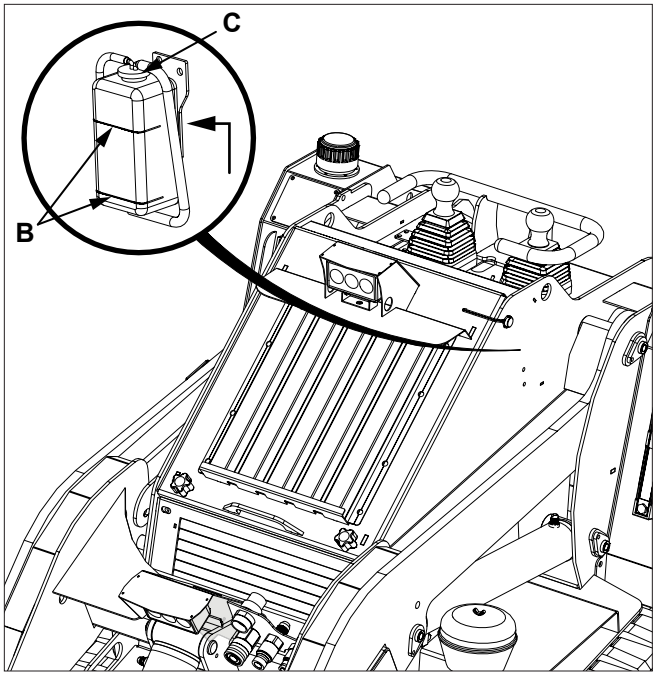

6. Add a premixed coolant or a 50/50 mix of water and anti-freeze to proper level.
7. Install tank and cap.
8. Close hydraulic cooler.
9. If expansion tank is empty, check coolant level in radiator. Remove radiator cap (D) to check coolant level. Maintain coolant level at bottom of filler neck.

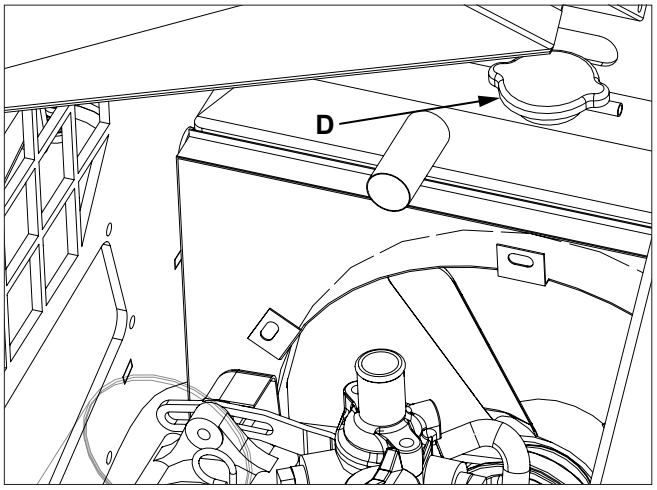

Check Radiator Intake Screen And Radiator

Remove and check engine radiator intake screen (A) and radiator (B) for dirt and debris before startup and every 10 hours.

Clean with compressed air or spray wash if required.

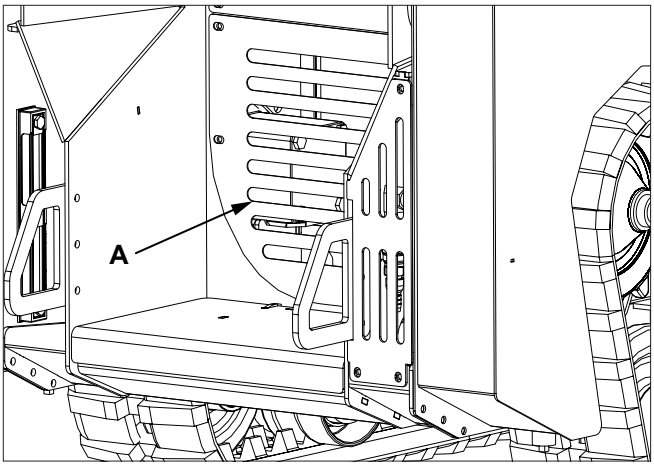

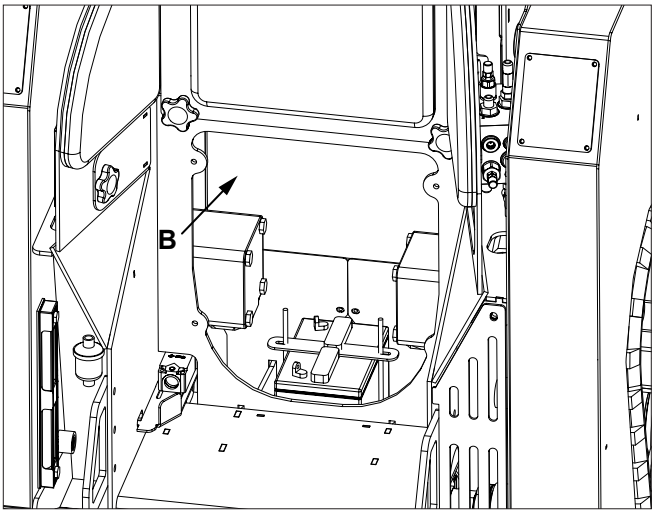

Check Hydraulic Fluid Cooler

Check hydraulic fluid cooler screen (A) for dirt and debris before startup and every 10 hours.

Clean with compressed air or spray wash if required. Do not damage fins with high pressure air or water.

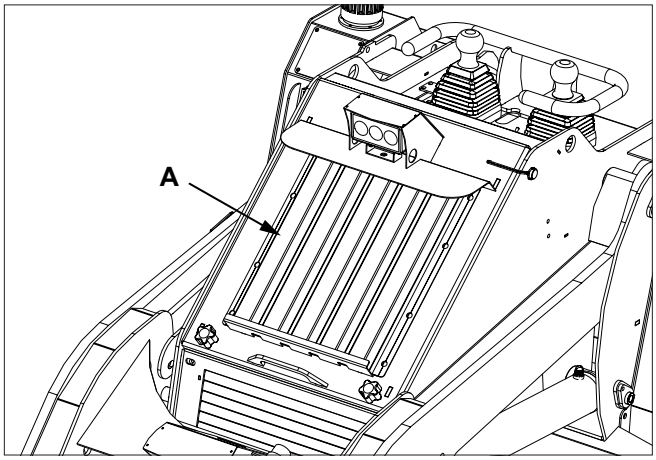

Check Operator On Board Safety Switch

1. Lower lift arms to ground, stop engine. Test switch operation before startup and every 10 hours.
2. Stand on operators platform (A) and start engine.

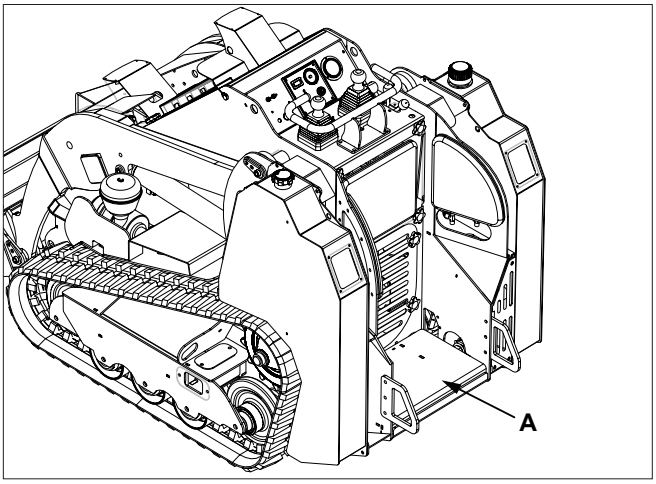

3. Step off operators platform. The drive and boom functions should be disabled if safety switch functioning correctly. If drive and boom functions are not disabled, switch engine off and contact a Baumalight dealer. Do not operate skidsteer if operator on board safety switch is not functioning correctly.

Inspect Tracks

Lower lift arms to ground, stop engine and remove key. Inspect tracks for wear and damage before startup and every 10 hours.

General Inspection

Lower lift arms to ground, stop engine and remove key. Inspect skidsteer for damage and worn parts. Repair or replace parts as needed.

5.4 Every 20 Hours

Lubrication

Skidsteer must be parked on a level surface, park brake engaged, lift arms fully lowered, engine stopped and key removed.

Pump grease into grease into fittings on quick attach latch pins every 20 hours.

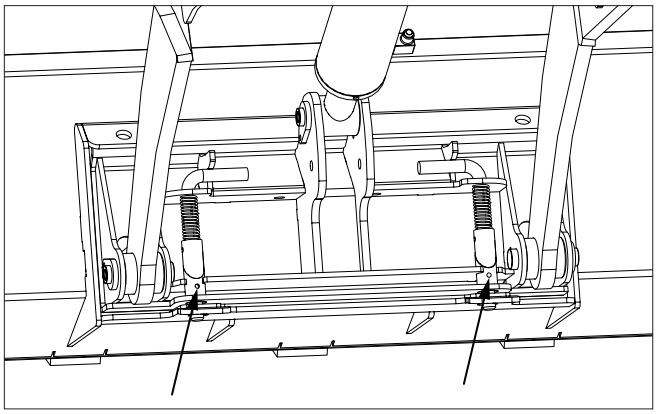

5.5 Every 100 Hours

Track Tension

Check track tension every 100 hours and adjust as needed.

1. Skidsteer must be parked on a level surface, park brake engaged, lift arms fully lowered, engine stopped and key removed.
2. Place a straight edge (A) across top of track as shown.
3. Measure dimension (B) between bottom of straight edge and top of track. Track tension is properly adjusted when dimension (A) is no more than 1 in. (25 mm) when measured near the center of track.

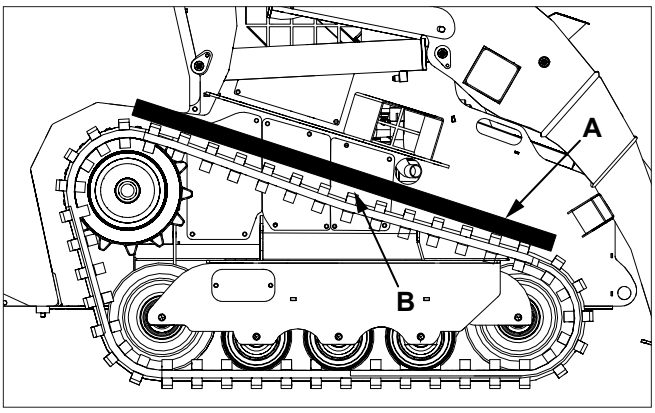

4. If adjustment is necessary follow steps 5-7.
5. Remove one of the three covers (C) to access grease fitting.

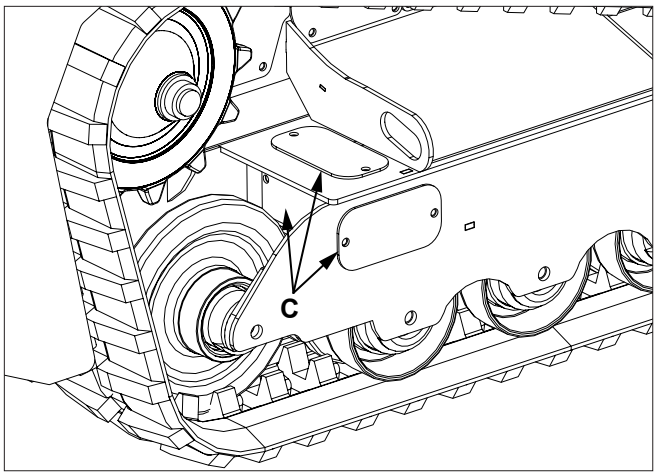

6. Pump grease into fitting (D) to adjust track tension so dimension (B) is no more than 1 in. (25 mm). Too much tension will stretch the track.

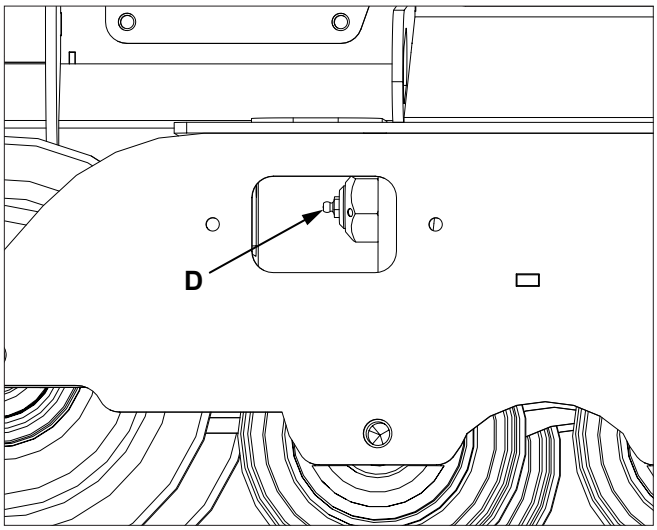

7. Install covers (C).

Check Engine Fan Belt

Skidsteer must be parked on a level surface, park brake engaged, lift arms fully lowered, engine stopped and key removed. Check belt for wear and damage. See engine operators manual.

Replace Air Filter

Replace air filter every 100 hours if operating in dusty conditions.

1. Skidsteer must be parked on a level surface, park brake engaged, lift arms fully lowered, engine stopped and key removed.
2. Open air filter housing (A) and remove filter element.

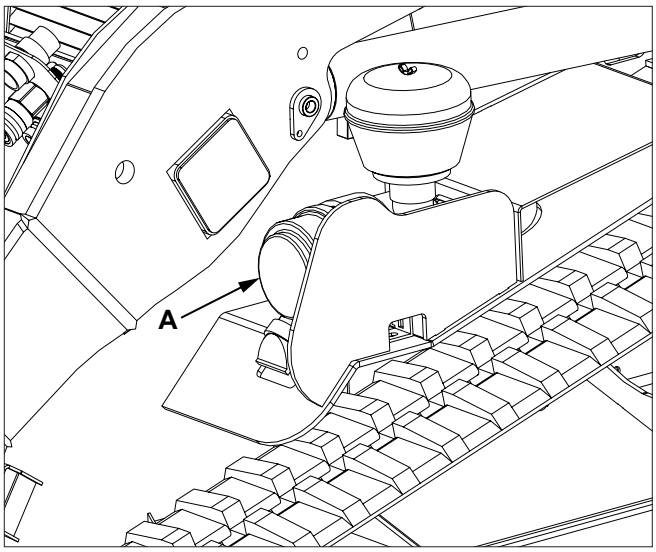

3. Clean inside of housing and end cap with a damp rag.
4. Insert new filter element and install end cap.

Check Drive Sprocket Nut Tightness

1. Check tightness on drive sprocket nut (A). Tighten nut to 1753 lb ft (2377 Nm) of torque.

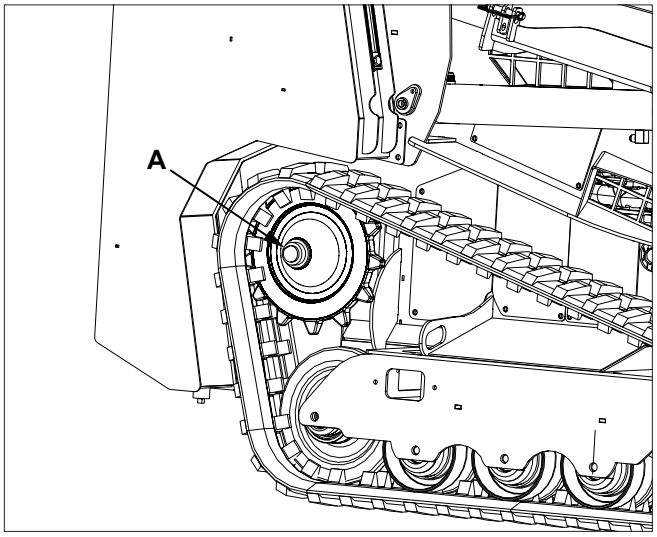

5.6 Every 250 Hours

Change Engine Oil And Filter

Skidsteer must be parked on a level surface, park brake engaged, lift arms fully lowered, engine stopped and key removed.

Remove oil plug (A), drain engine oil and replace filter (B) every 250 hours. Install plug (A), new filter (B) and proper quantity of engine oil. Use 15W-40 T4, T5 or T6 Synthetic Blend motor oil.

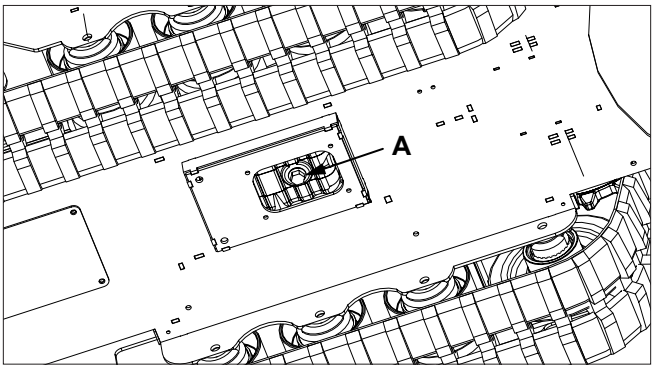

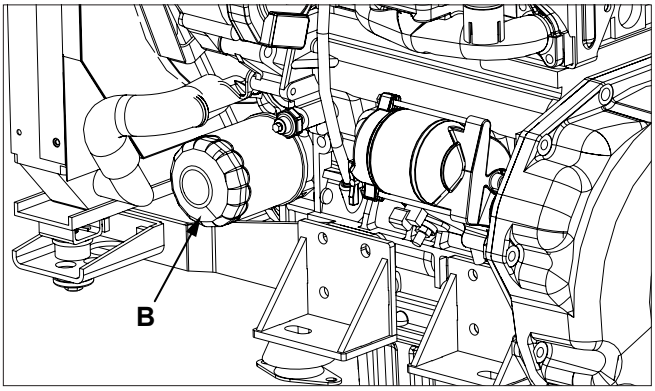

Check Air Intake Hoses

Check air intake hoses for wear and damage. Tighten clamp if loose. Replace worn, damaged or leaking parts.

5.7 Every 500 Hours

Replace Fuel Filter

1. Skidsteer must be parked on a level surface, park brake engaged, lift arms fully lowered, engine stopped and key removed.
2. Close fuel valve. Fuel valve is located near sight gauge in area (A).

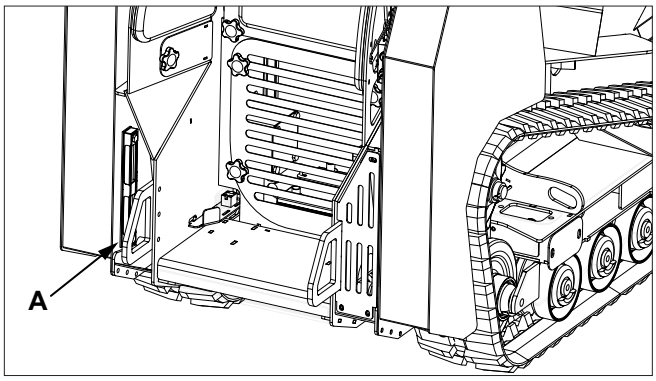

3. Loosen knobs (B) and pivot hydraulic oil cooler upward. Engage pin to hold cooler in open position.

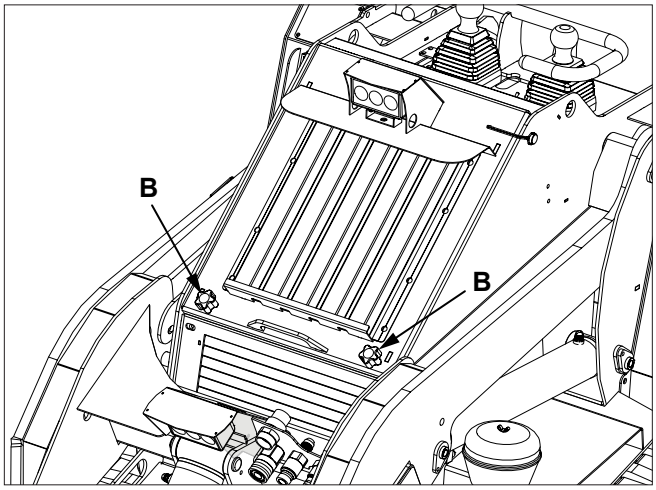

4. Replace filter (C) every 500 hours.

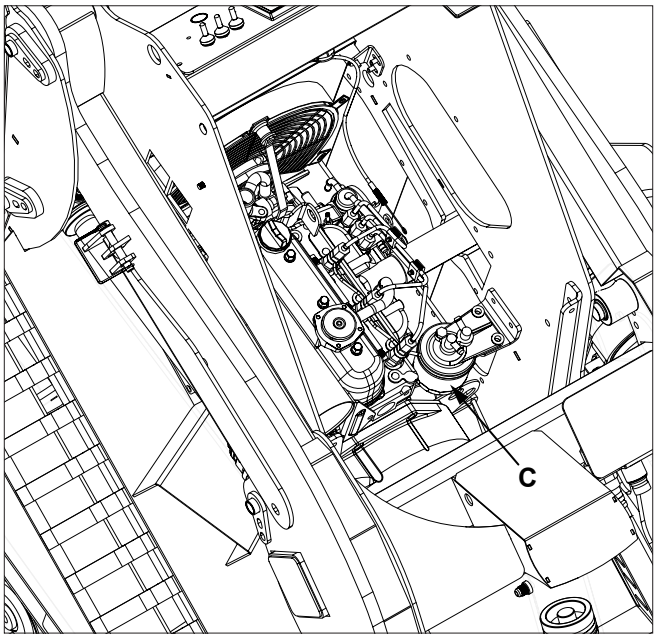

5. Close hydraulic oil cooler and open fuel valve.

Replace Hydraulic Filter

Replace hydraulic filter every 500 hours.

1. Skidsteer must be parked on a level surface, park brake engaged, lift arms fully lowered, engine stopped and key removed. Allow hydraulic system to cool to ambient temperature.

2. Loosen knobs and remove cover (A).

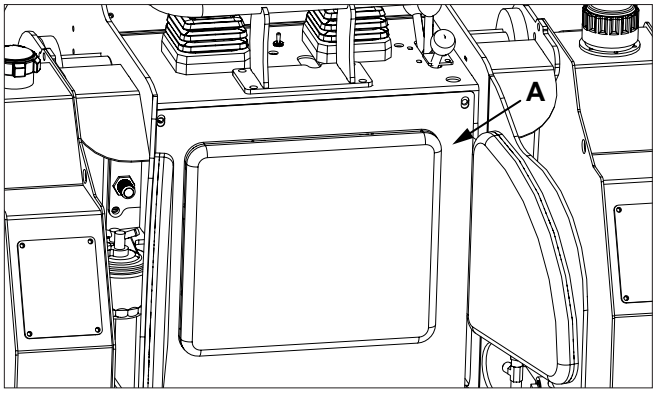

3. Close valve between tank and hydraulic filter head.
4. Remove and replace hydraulic filter (B).

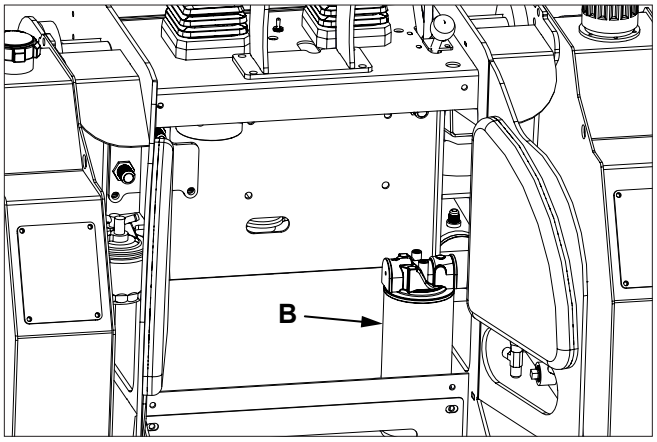

5. Install cover (A), open valve and check hydraulic fluid level. Add hydraulic fluid if necessary. See below for recommended hydraulic fluid.

   AW46: 32° to 95° F (0° to +35° C)
   AW32: 14° to 68° F (-10° to +20° C)
   MV22: -47° to 77° F (-44° to +25° C)

5.8 Every 1000 Hours

Change Hydraulic Fluid And Filter

Change hydraulic fluid and replace filter every 1000 hours. Change fluid and replace filter every 500 hours if operating in extreme conditions.

NOTICE

Dispose of waste properly.

Improper disposal of waste can harm the environment.

Use leak proof container when draining fluids. Do not use food or beverage containers.

Contact your local environmental or recycling center for the proper way to recycle or dispose of waste.

1. Skidsteer must be parked on a level surface, park brake engaged, lift arms fully lowered, engine stopped and key removed.
2. Remove drain plug (A) and drain hydraulic fluid into a suitable container. Install plug after draining.

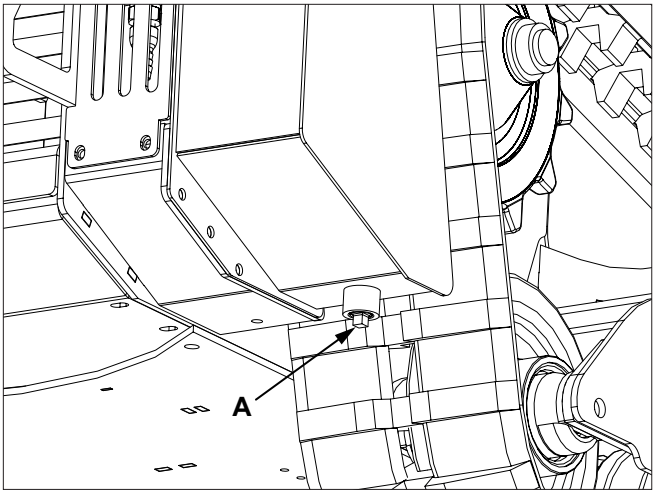

3. Remove cover, remove and replace hydraulic filter (B).

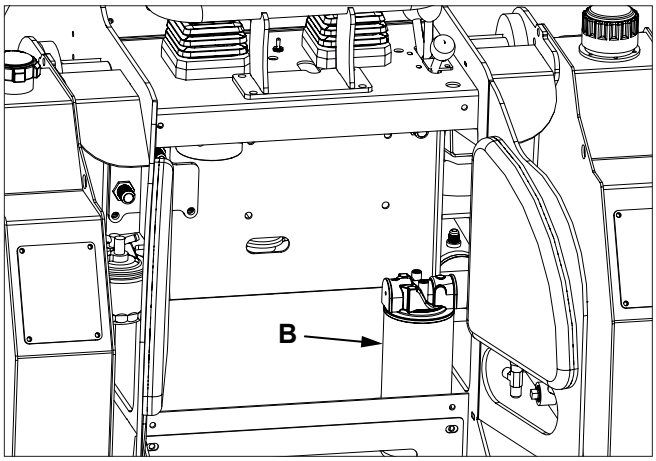

4. Install cover, remove cap (C) and add hydraulic fluid. Hydraulic reservoir capacity is 8.5 gal (32 L). Hydraulic fluid should fill approximately 50% of sight glass (D). See below for recommended hydraulic fluid.

   AW46: 32° to 95° F (0° to +35° C)
   AW32: 14° to 68° F (-10° to +20° C)
   MV22: -47° to 77° F (-44° to +25° C)

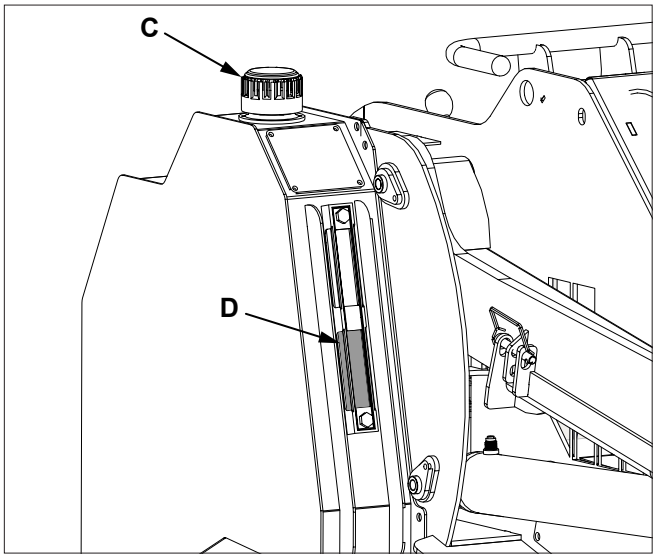

5.9 As Required

Check Battery

Check battery as needed. Keep battery clean and terminals free of corrosion.

⚠ WARNING

Batteries, battery posts, battery terminals, and related accessories can expose you to chemicals including lead and lead compounds, which are known to the State of California to cause cancer and birth defects or other reproductive harm.

For more information go to www.P65Warnings.ca.gov.

1. Raise lift arms and install lift arm lock. See Lift Arm Lock in Section 4.8.
2. Remove cover (A) to access battery (B).

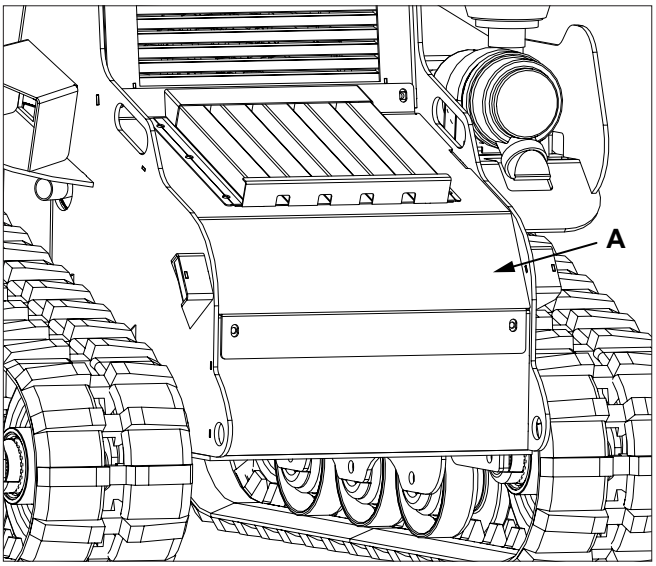

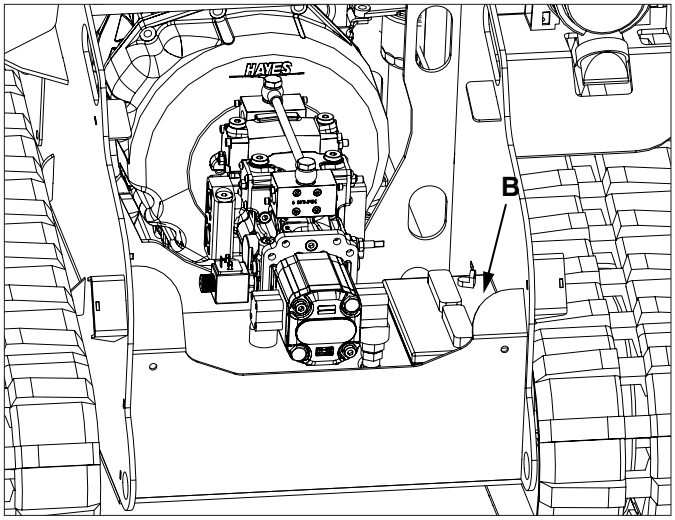

3. Loosen and remove negative (-) battery cable clamp.
4. Loosen and remove positive (+) battery cable clamp.
5. Clean cable clamps and terminals.
6. Check cables for wear, damage or corrosion. Replace cables if necessary.
7. Connect positive (+) battery cable clamp.
8. Connect negative (-) battery cable clamp.
9. Verify battery tie downs are tight.
10. Install cover (A).

Check And Adjust Auxiliary Hydraulic Pressure

1. Stand on operators platform and start engine.
2. Allow hydraulic fluid to warm up.
3. Increase engine RPM to operating speed.
4. Move joystick to rollback position and observe auxiliary hydraulic pressure on instrument panel gauge. Pressure should be approximately 3000 psi (207 bar).
5. If pressure is low, verify hydraulic fluid is at proper level in tank. If fluid is at proper level, adjust auxiliary hydraulic pressure using the following procedure.
6. Loosen knobs (A) and pivot hydraulic oil cooler upward. Engage pin to hold cooler in open position.

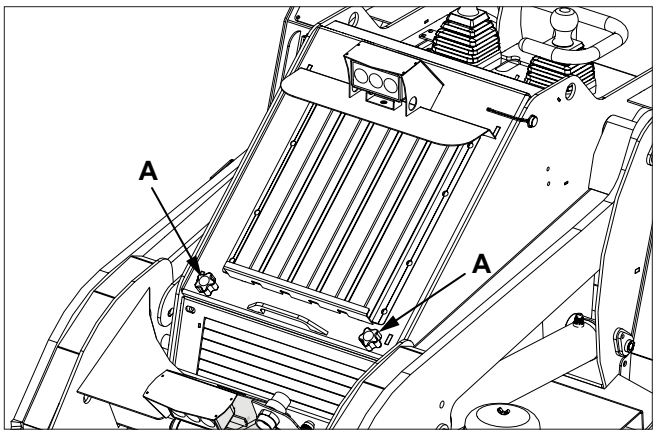

7. Remove access cover on rear of engine compartment and loosen jam nut (B) on boom valve with 17 mm wrench.

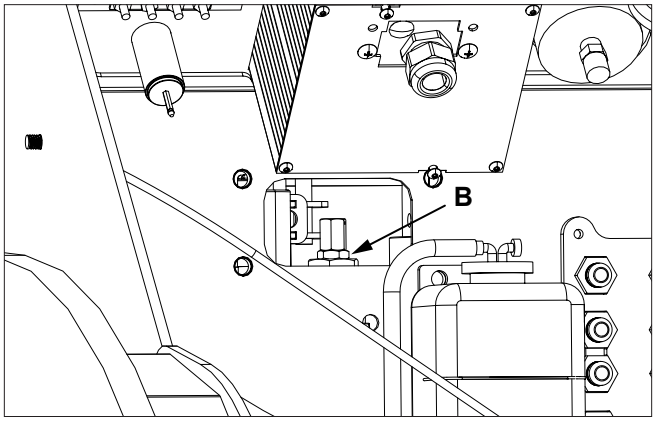

8. Insert 5 mm hex wrench down through access hole (C) on control panel and into hex screw on boom valve.

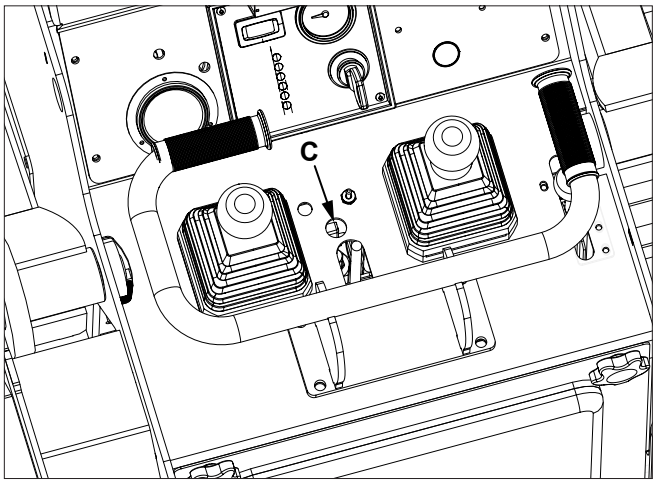

9. Hold locknut (B) with wrench and rotate hex adjustment screw 1/4 turn counter clockwise. Tighten locknut (B), install access cover, close oil cooler, start engine and test operation.

10. Repeat step 9 again if needed.

Test operation. If pressure is still low, contact your Baumalight dealer.

6 TROUBLESHOOTING

PROBLEM	CHECK	SOLUTION
Engine overheating.	Coolant level low.	Add coolant.
	Engine cooler clogged.	Clean cooler.
	Engine fan belt slipping.	Tighten belt. Replace belt if damaged.
	Air intake restricted.	Replace air filter, check intake system.
Hydraulic fluid overheating.	Hydraulic fluid level low.	Add hydraulic fluid.
	Hydraulic cooler clogged	Clean cooler.
	Hydraulic cooler fan not running.	Check fan operation. Check cooler fan fuse located near the battery.
	Hydraulic filter clogged.	Replace filter.
	Repeatedly exceeding hydraulic system limits causing hydraulic fluid to flow over relief valve.	Ease up operation, don't exceed limits of the machine.
Weak auxiliary hydraulic function on attachment.	Hydraulic filter clogged.	Replace filter.
	Engine throttle set too low.	Increase engine speed.
	Hydraulic relief valve set too low.	Contact your Baumalight dealer for assistance.
Can not connect hydraulic couplers.	Hydraulic pressure lock.	Stop engine and push joystick forward to connect one coupler and pull back to connect the other. Ensure joystick is in neutral position before starting engine.
Fuse blown.	Overloaded 12 Volt receptacle.	Unplug load on receptacle. Replace fuse located near the battery.
	Solenoid failure.	Test solenoid. Replace solenoid if necessary. Replace fuse.
	Damaged or faulty wiring.	Check for worn or damaged wiring. Repair wires or replace harness if necessary. Replace fuse.
Engine starts but no other functions operate.	Blown fuse.	Check fuse on circuit from Lofa panel. Replace fuse in harness located behind the Lofa instrument panel in the engine compartment.
Engine will not crank over.	Main fuse blown.	Replace main fuse located inside the Lofa instrument panel. Remove instrument panel faceplate to access fuse.
	Damaged or faulty wiring.	Check for worn or damaged wiring. Repair wires or replace harness if necessary.

PROBLEM	CHECK	SOLUTION
Engine cranks over but does not start.	Auxiliary hydraulic control turned on.	Turn auxiliary control off.
	Battery discharged.	Charge and load test battery. Replace battery if necessary.
	Too cold.	
	Solenoid failure.	Test solenoid. Replace solenoid if necessary.
	Damaged or faulty wiring.	Check for worn or damaged wiring. Repair wires or replace harness if necessary.
Unit will not move.	Park brake engaged.	Disengage park brake.
	Operator platform not engaged.	Operator must be standing on operator platform. Check operator platform to verify switch is engaging.
	Operator on board switch not functioning properly.	Check switch operation. Replace switch if necessary.
	Fuse blown.	Check fuse on circuit from Lofa panel. Replace fuse in harness located behind the Lofa instrument panel in the engine compartment.
	Check for power to boom valve.	With engine stopped and ignition switch in the on position, check to see if light on boom valve solenoid (A) connector is on. If light is not on, check fuse. If fuse is good, check wiring between boom valve and fuse block. 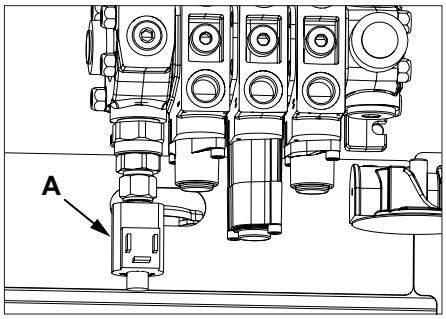

PROBLEM	CHECK	SOLUTION
Boom will not raise.	Operator platform not engaged.	Operator must be standing on operator platform. Check operator platform to verify switch is engaging.
	Park brake engaged.	Disengage park brake.
	Fuse blown.	Check fuse on circuit from Lofa panel. Replace fuse in harness located behind the Lofa instrument panel in the engine compartment.
	Check for power to boom valve.	With engine stopped and ignition switch in the on position, check to see if light on boom valve solenoid (A) connector is on. If light is not on, check fuse. If fuse is good, check wiring between boom valve and fuse block. 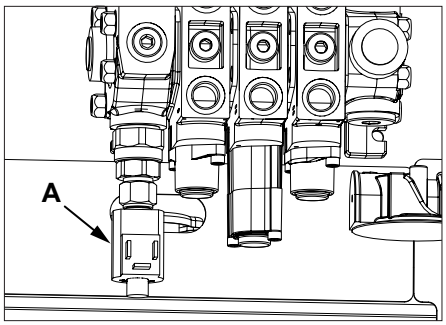

7 STORAGE

7.1 Storing

1. Store skidsteer in a dry place.
2. Clean skidsteer thoroughly. Dirt will draw moisture and cause rust.
3. Check for loose or missing hardware.
4. Paint parts as necessary.

7.2 Remove From Storage

1. Review Operator's Manual.
2. If parts have been replaced, verify they operate properly.

8 WARRANTY

The product is warranted to be free of defects in materials and workmanship under normal use and service, for a period of one year from the date of purchase. This warranty covers parts and labor, but does not cover misuse, negligence and shipping costs to and from the nearest Authorized Service Center.

The engine is covered by the engine manufacturer and is detailed in a separate warranty statement. Authorization from the engine manufacture must be obtained before any work is started on the engine, radiator or any engine mounted parts.

Dealer travel time is not covered by warranty unless the mini skidsteer will not drive. In this case we will cover 0.60 per km in Canada (0.50 in US) up to 100 km driven per trip during the warranty period.

Replacement of individual parts vs. assemblies are at the discretion of the manufacturer.

Warranted replacement parts will be shipped to the customer free of charge via ground shipping. If expedited shipping requested, the customer will be charged the difference between ground shipping and the cost of expedited shipping. Damage in transit is not covered by warranty.

Baumalight products purchased new must be registered for warranty at *https://online-order.baumalight.com/product/product-registration*

Warranty claims must include the original bill of sale. This warranty is extended only to the original purchaser and there is never any warranty on anything sold through auction.

This product must be operated and maintained in accordance with the Operating and Maintenance Instructions supplied with this unit.

Under no circumstances will the manufacturer be liable for any consequential damage or expense of any kind, including loss of profits. The manufacturer is under no circumstances liable for attachment damage of any kind. The manufacturer is not liable for the maintenance of the product. Baumalight will not cover time to diagnose and repair compatibility issues between skidsteer and attachment.

When receiving a shipment from the manufacturer:

1. Compare items received with the carriers bill of lading.
2. Check for damage before signing for the shipment. If damage is found, note damage on carriers bill of lading and photograph the damage.

Warranty repairs may be done by the end user if the end user is willing and capable.

The Manufacturer's Liability is limited to repair of the product and/or replacement of parts and is given to the purchaser in lieu of all other remedies including incidental and consequential charges. There are no warranties, expressed or implied other than those specified herein. For the nearest Authorized Service Center call the manufacturer.

The allowable time for dealers to perform some repairs can be found on our website in the support section under Service And Instruction Videos & Support. If website does not list a time for the repair, dealer must contact the manufacturer before starting the repair to find how much time will be covered for the activity. The manufacturer will only cover up to 1 hour to diagnose and troubleshoot an issue, regardless of the suggestions recommended by the manufacturer to check and verify an issue.

Model Number: _____ S/N:_____

Date of Purchase: _____ Owner's Name_____

For parts, specifications and the latest machine information please visit our website.

www.baumalight.com

MTB MFG INC.
CORPORATE HEADQUARTERS
4575 Powell Rd.,
Wallenstein, Ontario Canada
N0B 2S0
www.baumalight.com