BAUMALIGHT™

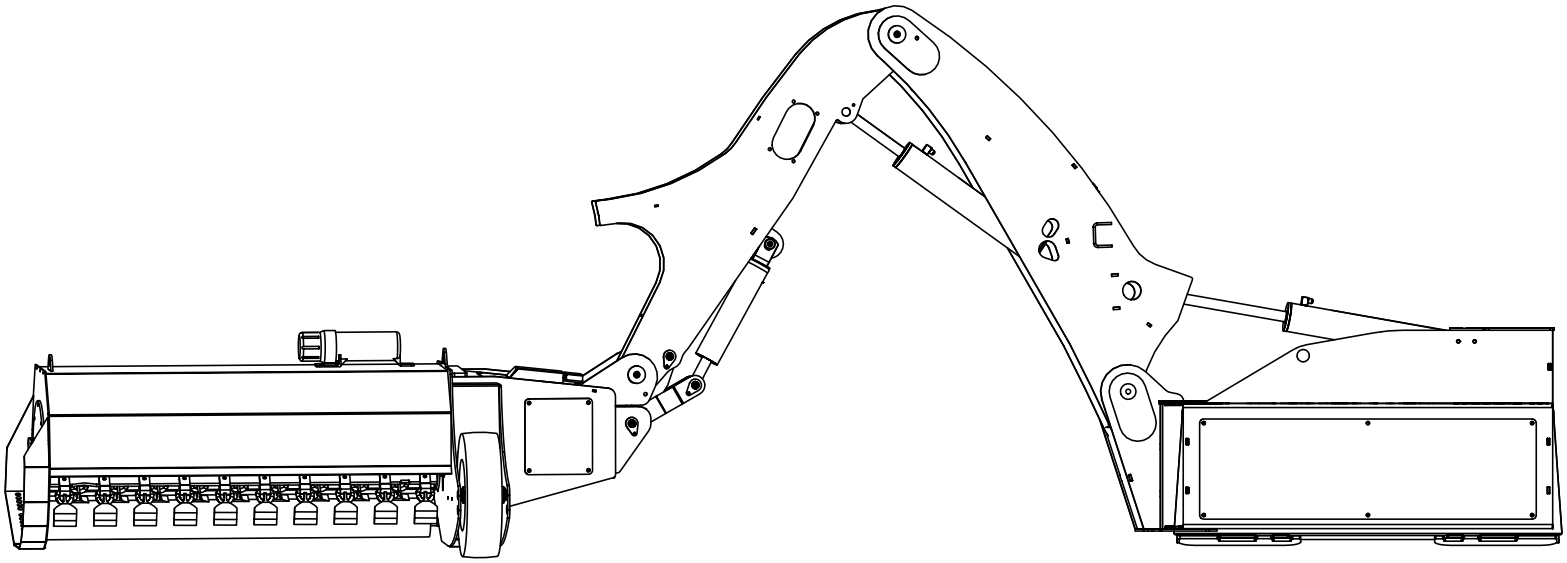

BAUMALIGHT™

Skidsteer Boom Mower

OPERATOR'S MANUAL

Issue Date: August 2023

Service And Instructional Videos

Find online at baumalight.com/support

Following is a list of videos and documents available on Baumalights website and also on YouTube to help and enhance maintaining the mower. The list below was current at the time this manual was issued. Additional content may be available.

Activity ID Number	Activity Name	Description	Item Available
85	Inserting A Pin In An 8 And 14 Pin Connector.	Changing Pins In Aux Receptacle.	Video
99	Valve Adjustments.	Valve Adjustments For Cylinders And Pressure.	Video
101	Remove Seal.	Remove Seal On Motor Or Load Adapter.	Video
118	Zero-Leak Relief Valve.	Demonstrating And Troubleshooting Zero-Leak.	Video
35	Replace Motor Shaft Seal.	Replace Shaft Seal On Piston Motor.	Video

TABLE OF CONTENTS

1 INTRODUCTION 4
1.1 Overview 4
1.2 Intended Use And Foreseeable Misuse 4
2 SAFETY 5
2.1 Safety Alert Symbol And Safety Words 5
2.2 Operational Hazards 5
Prepare for Emergencies 6
Replace Safety Signs 6
Do Not Allow Riders 6
Lower Operating Speed 7
Avoid Rollover 7
Avoid Powerlines & Underground Utilities 7
Detach Boom Mower Safely 7
Hazards From Modifying Equipment 8
2.3 Maintenance Hazards 9
3 SAFETY SIGNS 10
3.1 SWF Models 10
3.2 SWA Models 10
4 ASSEMBLY 14
4.1 SWF Models 14
4.2 SWA Models 15
5 OPERATION 17
5.1 Preparation For Use 17
5.2 Hydraulic Connections 17
5.3 Machine Components 18
5.4 Control Boxes 18
5.5 Attach Boom Mower 19
5.6 Transporting 20
5.7 First Time User Tips 20
5.8 Field Operation 21
5.9 Height Adjustment 22
5.10 Hydraulic Adjustment 24
5.11 Detach Boom Mower 25
6 SERVICE AND MAINTENANCE 26
6.1 Daily 26
6.2 Every Four Hours 26
6.3 Replace Cutting Teeth 27
6.4 Lubrication 27
6.5 Motor Shaft Seal 28
6.6 Zero Leak Case Drain Relief Valve 29
7 TROUBLESHOOTING 30
BAUMALIGHT ATTACHMENT WARRANTY 31

1 INTRODUCTION

1.1 Overview

Congratulations on your choice of a Baumalight Skidsteer Boom Mower to complement your operation. This equipment has been designed and manufactured to meet the needs of a discriminating buyer.

The skidsteer boom mower is ideal for mowing heavy grass and mulching light brush in ditches.

Skidsteer must have suitable safety equipment properly installed.

Safe, efficient and trouble free operation of your boom mower requires that you and anyone else who will be operating or maintaining the boom mower, read and understand the Safety, Operation, Maintenance and Troubleshooting information contained within the Operator's Manual.

This manual covers the Baumalight Skidsteer Boom Mower. Use the Table of Contents as a guide to locate required information.

Keep this manual handy for frequent reference and to pass on to new operators or owners. Call your Baumalight dealer, distributor or the factory if you need assistance, information or additional copies of the manuals.

OPERATOR ORIENTATION - The directions left, right, front and rear, as mentioned throughout this manual, are as seen from the driver's seat and facing in the direction of travel.

1.2 Intended Use And Foreseeable Misuse

The boom mower is designed to be used by an experienced operator. Operator must be trained in the safe operation of a skidsteer and hazards related to using the boom mower and the safe use of the boom mower for the intended purpose. Operators will require personal protective equipment to reduce the risk from some hazards that cannot be completely eliminated or controlled by the design of the boom mower.

Care is required to ensure that the boom mower will not come in contact with metallic objects, stones or other materials.

Boom mowers are not designed for use in hazardous atmospheres where there is a risk of fire or explosion due to flammable gases or vapors. Use in hazardous, explosive atmospheres is prohibited. Serious injury or death of the operator or bystanders may be caused if boom mower is misused. Misuse may also cause damage to the machine carrying the boom mower.

2 SAFETY

2.1 Safety Alert Symbol And Safety Words

You must read, understand and follow the instructions given by the skidsteer manufacturers, as well as the instructions in this manual.

The safety information in this manual is denoted by the safety alert symbol:

This symbol means ATTENTION! BECOME ALERT! YOUR SAFETY IS INVOLVED!

The level of risk is indicated by the following signal words:

DANGER

DANGER - Indicates a hazardous situation, which, if not avoided, WILL result in death or serious injury.

WARNING

WARNING - Indicates a hazardous situation, which, if not avoided, could result in death or serious injury.

CAUTION

CAUTION - Indicates a hazardous situation, which, if not avoided, could result in minor or moderate injury.

NOTICE

NOTICE - Indicates a situation that could result in damage to the equipment or other property.

2.2 Operational Hazards

WARNING

Prevent death or serious injury.

Read and understand this manual before operating boom mower.

Always stop engine and remove key before leaving operators seat.

Never allow anyone near the boom mower during operation.

Travel at a safe speed.

WARNING

Prevent death or serious injury from moving parts.

Moving parts can crush and dismember.

Do not operate without guards and shields in place.

Disconnect and lockout power source before adjusting or servicing.

WARNING

Use boom mower only for the designed applications.

Any other use may result in personal injury, damage to equipment and may void the warranty.

WARNING

Prevent death or serious injury.

Verify boom mower is locked to skidsteer before operation or transport.

WARNING

Protect from flying debris.

Wear proper safety glasses, goggles, or a face shield to protect from flying debris.

Carefully read all safety messages in this manual and on equipment safety signs. Keep safety signs in good condition and replace missing or damaged safety signs.

New equipment components and repair parts must include the current safety decal.

Learn how to properly operate equipment. NEVER operate or work around this equipment without proper instruction, while fatigued or under the influence of alcohol, prescription or non-prescription medication or if feeling ill.

Keep your equipment in proper working condition. Know the regulations and laws that apply to you and your industry. This manual is not to replace any regulations or laws. Additional information may be found at: www.asae.org or www.osha.gov. If you do not understand any part of this manual, contact Baumalight.

Prepare for Emergencies

- Be prepared in case of emergencies.
- Keep a fire extinguisher and first aid kit close to the machine.
- Keep emergency phone numbers close to your phone.
- Know your address so emergency services can locate you if an emergency arises.

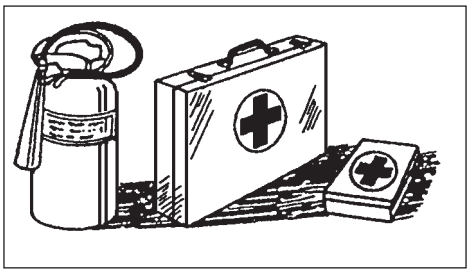

Replace Safety Signs

- Replace missing or damaged safety signs.
- Safety signs are identified in Section 3 of this manual.
- Replacement safety signs are available from your Baumalight dealer.

Do Not Allow Riders

- NEVER lift or carry anyone on boom mower.
- NEVER use boom mower as a work platform.
- NEVER allow passengers on boom mower.

Lower Operating Speed

Keep boom mower low and move at slow speeds on rough or uneven terrain.

Lower operating speed while operating in heavy conditions.

Avoid Rollover

The equipment may rollover, resulting in death or serious injury. To help prevent rollover:

- Travel at a slow speed.
- Avoid sharp turns & sudden movement on slopes.
- Carry boom mower close to the ground.
- Avoid holes, ditches and other obstructions which may cause equipment to rollover.
- Balance load so weight is evenly distributed and load is stable.
- Use caution when operating on slopes and do not operate on excessively steep slopes.
- Do not exceed load capacity of equipment.

Avoid Powerlines & Underground Utilities

⚠ DANGER

Prevent electrocution.

Death or serious injury can result if equipment comes near or contacts power lines.

Electrocution can occur without direct contact.

- Check clearance before raising equipment.

DO NOT leave the operator's seat if any part of the equipment contacts electric lines or cables.

Detach Boom Mower Safely

Detach boom mower on a firm and level surface. Be sure people, livestock and pets are clear of machinery.

Raised Attachment

WARNING

Crushing hazard.

Raised, unsupported boom mower can fall, resulting in death or serious injury.

Never enter the area under a raised boom mower.

A raised boom mower can lower unexpectedly, resulting in death or serious injury.

NEVER enter area under a raised boom mower.

Lower boom mower to ground, engage parking brake, shut off engine and remove key before servicing.

Hazards From Modifying Equipment

Do not make any alterations to your boom mower. Altering may cause your equipment to be unsafe and may void the manufacturers' warranty.

Avoid Loud Noise

WARNING

Prolonged exposure to loud noise can cause impairment or loss of hearing.

Wear a suitable hearing protective device such as earmuffs or earplugs to protect against objectionable or uncomfortable loud noises.

Stay Clear Of Moving Parts

WARNING

Moving parts can cause serious injury or death.

Keep shields and guards in place at all times. DO NOT operate without shields and guards.

DO NOT wear loose fitting clothing.

Avoid Wood Dust Inhalation

WARNING

Drilling, sawing, sanding or machining wood products can expose you to wood dust, a substance known to the State of California to cause cancer.

Avoid inhaling wood dust or use a dust mask or other safeguards for personal protection. For more information go to www.P65Warnings.ca.gov/wood.

WARNING

Wear an approved dust mask or respirator.

Follow local, state and federal regulations.

2.3 Maintenance Hazards

Before servicing, park machine on a firm and level surface, set parking brake and place a “Do Not Operate” tag on control panel. Read and understand this manual. If you do not understand any part of the manual, contact Baumalight.

Always wear face and/or eye protection, safety shoes, and other protective equipment appropriate for the job.

Do not make unauthorized modifications. Contact Baumalight before you weld, cut/drill holes, or make any other modifications.

Always use Baumalight replacement parts.

WARNING

Moving parts can entangle and cut.

Keep clear of moving parts.

Follow lockout procedure before servicing.

WARNING

Entanglement hazard.

Keep clear of moving components.

Wear proper protective equipment appropriate for the job.

WARNING

Burn hazard.

Hot and high pressure hydraulic oil.

Allow oil to cool before servicing.

WARNING

Crushing hazard.

Before performing inspections, service or maintenance:

Park machine on firm, level surface.

Engage parking brake.

Lower boom mower to ground.

Turn engine off and remove key.

Place “Do Not Operate” tag on control panel.

WARNING

Drilling, sawing, sanding or machining wood products can expose you to wood dust, a substance known to the State of California to cause cancer.

Avoid inhaling wood dust or use a dust mask or other safeguards for personal protection. For more information go to www.P65Warnings.ca.gov/wood.

WARNING

Wear an approved dust mask or respirator.

Follow local, state and federal regulations.

3 SAFETY SIGNS

3.1 SWF Models

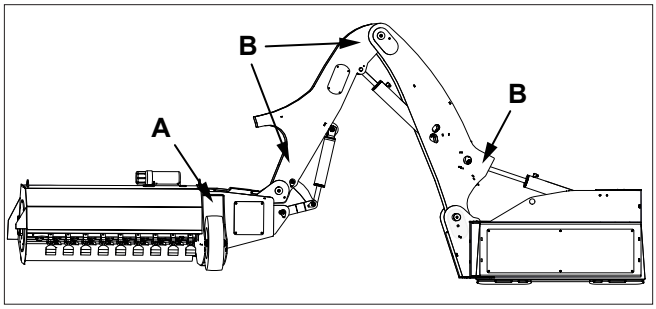

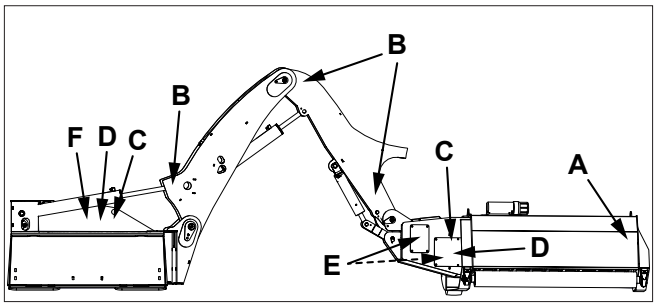

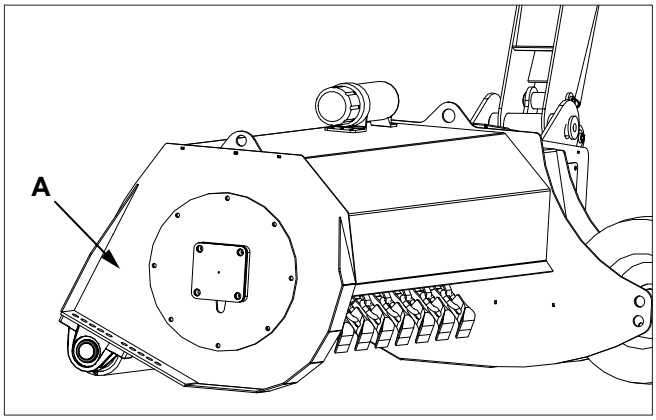

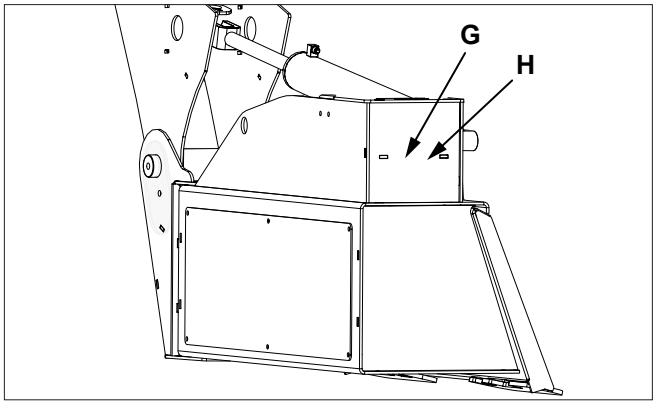

3.2 SWA Models

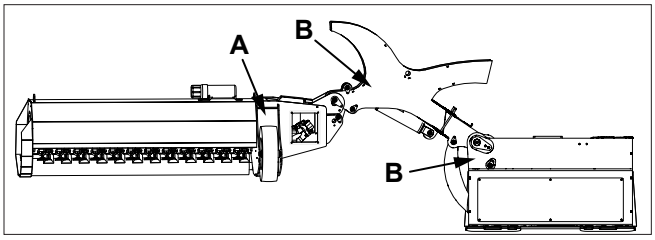

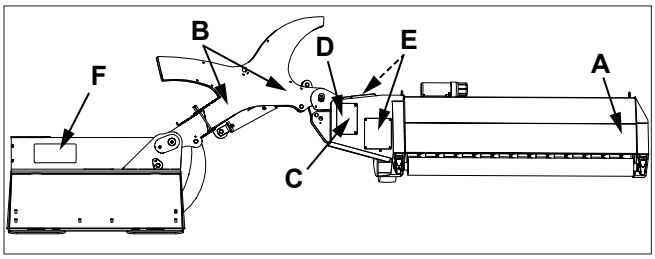

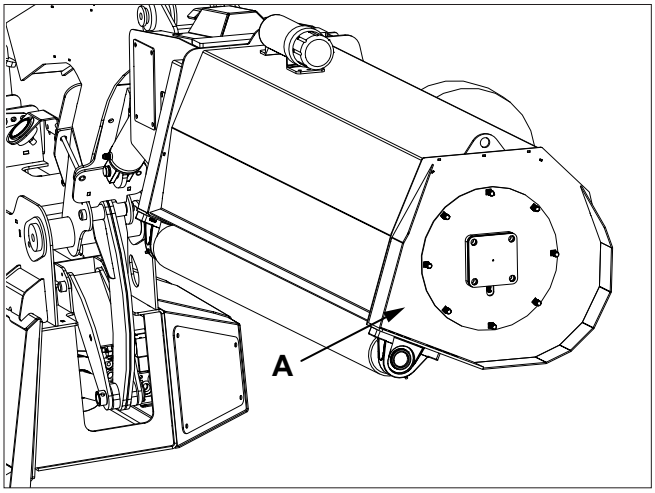

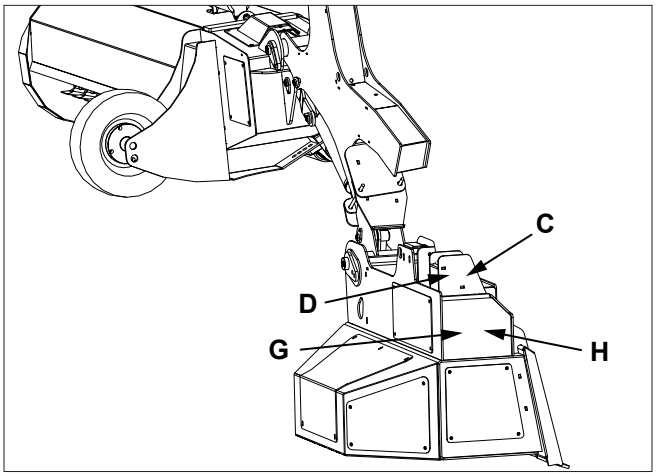

The two and four panel safety decals are pictorial and have a yellow background. The panel with a triangle indicates the potential hazard. The panel without a triangle indicates how to avoid the hazard.

If any of the decals are missing, are damaged, or if you do not understand the decal, please contact your dealer.

A. D005255 ⚠ WARNING - Rotating blade hazard. Keep back 75 m while machine is operating. Wait for blade to stop before approaching machine.

B. D005127 ⚠ WARNING - Pinch point hazard. Keep back while machine is operating

C. D005262 ⚠ WARNING - P65 warning information.

WARNING: This product can expose you to chemicals including 1,3-Butadiene and lead, which are known to the state of California to cause cancer and birth defects or other reproductive harm. For more information go to www.P65Warnings.ca.gov.

D005262

D. D005126 ⚠ WARNING - Pressurized fluid hazard. Pressurized fluids can penetrate the skin. Do not check for leaks with your hands. Keep back a safe distance when pressurized.

E. D005129 ⚠ WARNING - Rotating part hazard. Keep hands, feet, hair and clothing away from moving parts.

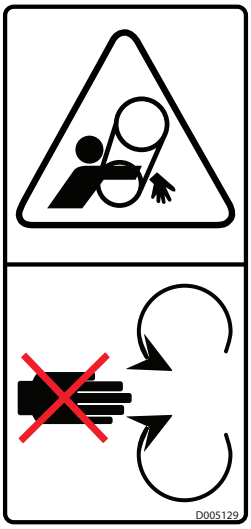

F. D004878 ⚠ WARNING - Lift arms must be fully lowered.

G. D005125 ⚠ WARNING - Read and understand safety signs on the machine and operating instructions in this manual before operating machine.

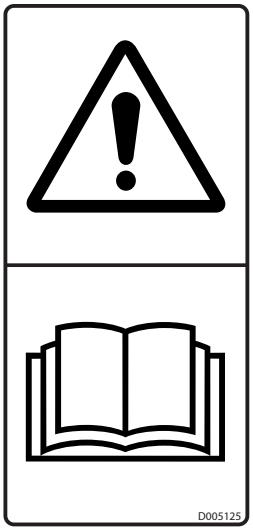

H. D005517 ⚠ WARNING - Remove key before servicing.

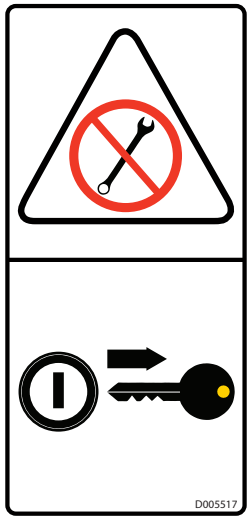

4 ASSEMBLY

4.1 SWF Models

WARNING

Crush hazard.

The cutting head weight is 400-600 lbs (181-272 kg) depending on model.

Use properly rated lifting devices to lift and move cutting head.

NOTICE

Prevent equipment damage.

Case drain hose must be connected to motor.

Failure to connect case drain hose will result in hydraulic motor damage.

Damage due to neglect is not covered by warranty.

1. Connect boom mower to skidsteer. See Attach Boom Mower in section 5.
2. Verify valve lever is in the Cutting Head Off position.
3. Position mower boom to cutting unit (A) and install pins (B). Install pin retainers.
4. Pump grease into grease fittings on pins (B).

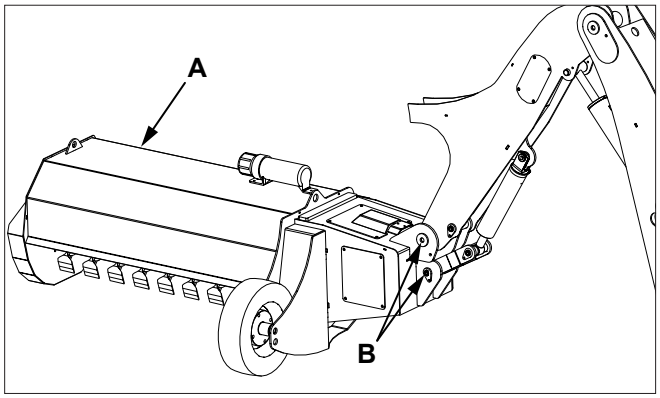

5. Remove cover (C).
6. Connect case drain hose (small hose) to case drain fitting (D) on motor.
7. Install cover (C).

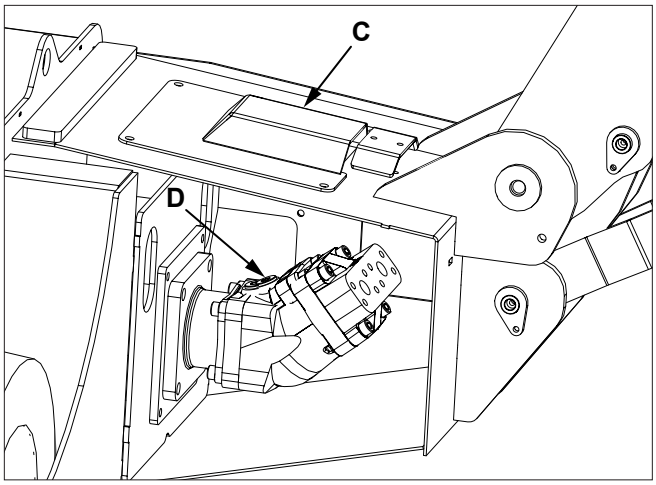

8. Remove cover (E).
9. Connect hoses with zip ties together.
10. Connect hoses without zip ties together.
11. Install cover (E).

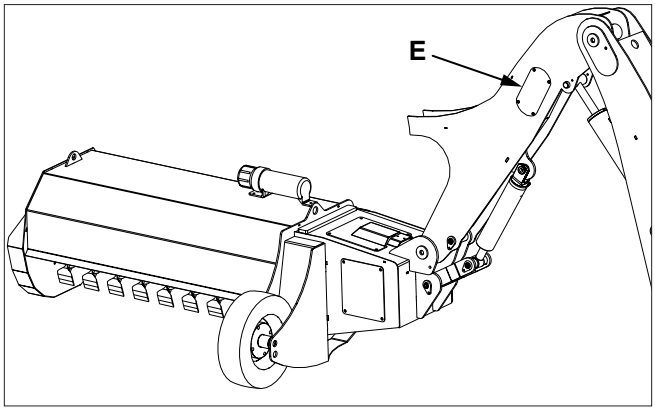

12. Connect electrical controls to boom mower. With engine off and electrical power on, select each control function to verify pins on auxiliary plug are in the desired locations. Light on valve will illuminate when that valve is selected.

F - Tilt
G - Stick
H - Boom

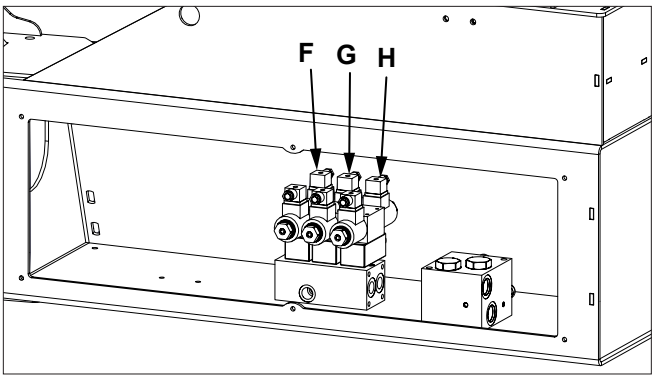

13. Install all covers.

4.2 SWA Models

1. Connect boom mower to skidsteer. See Attach Boom Mower in section 5.
2. Remove pins (A).

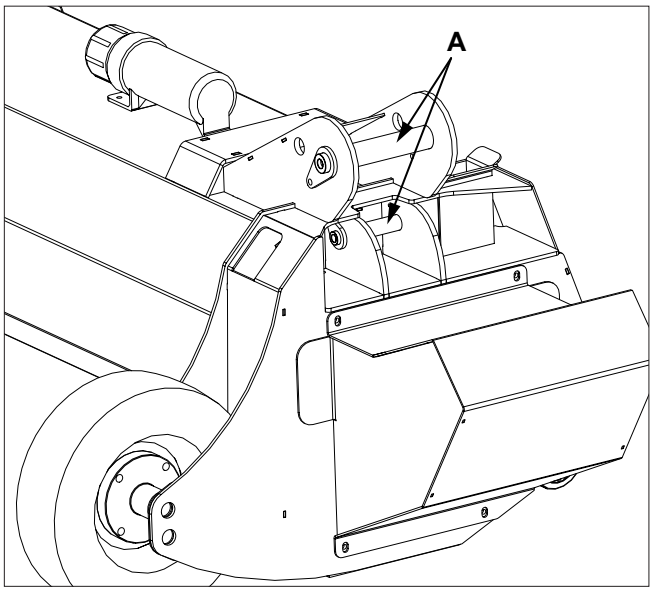

3. Verify valve lever is in the Cutting Head Off position.
4. Operate skidsteer and position boom so bushings align and install pins (A).
5. Shut off skidsteer engine.

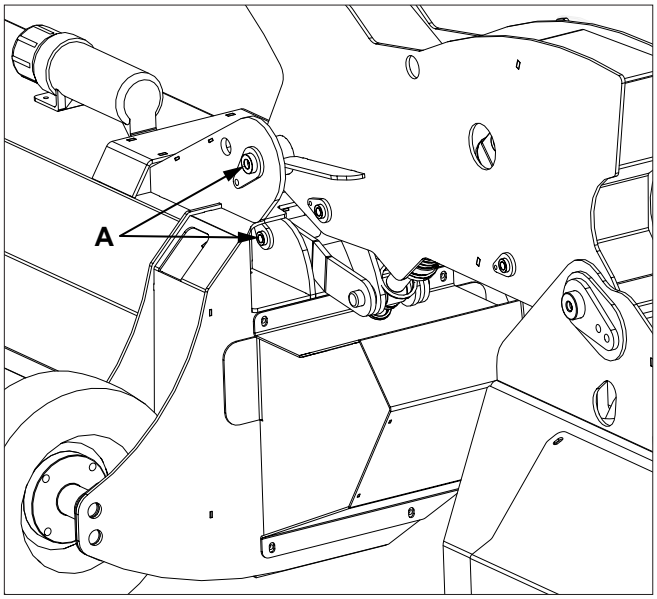

6. Remove motor cover (B).

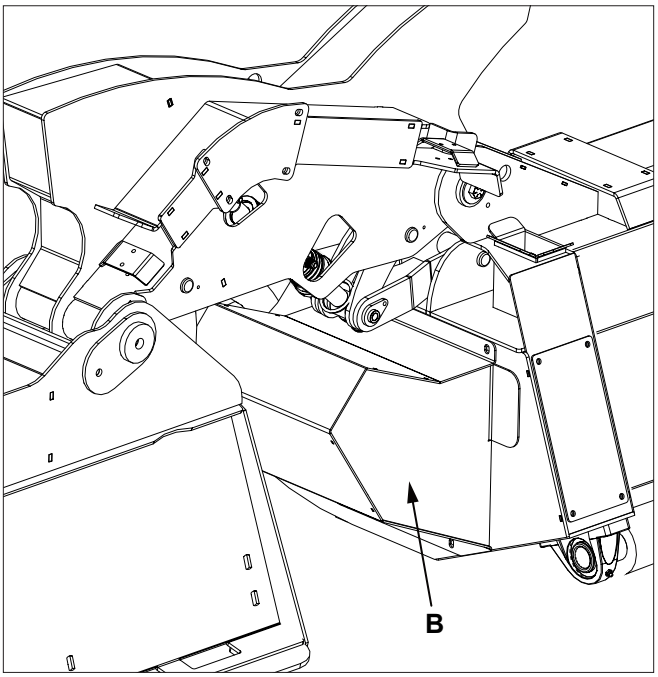

7. Route pressure, return and case drain hoses, under hold downs (C) and through opening (D).
8. Route small case drain hose through opening (E) and connect to case drain port (F) on motor. This hose is critical and must be installed.
9. Route pressure and return hoses through opening (G), remove hose plugs and connect to ports (H) on motor. Connect hose with red zip tie to fitting on motor with red zip tie. Connect hose with no zip tie to fitting on motor with no zip tie.
10. Verify hoses are clear of pinch points and moving and/or rotating parts.

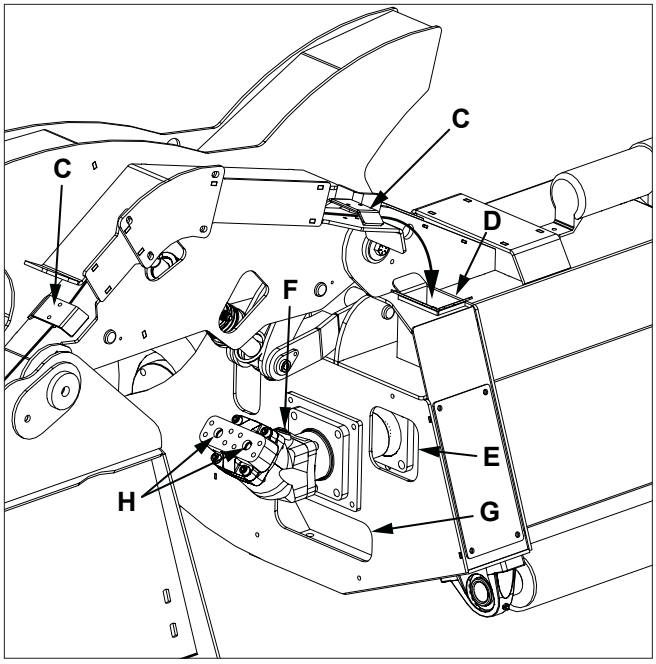

11. Install motor cover (B).

5 OPERATION

5.1 Preparation For Use

Although the boom mower has been carefully inspected and checked prior to shipment from manufacturer, it is recommended that the unit be thoroughly inspected.

Check all bolts for tightness and remove all shipping tags, bags, skids, and blocking.

Remove any masking materials affixed during painting. Inspect equipment to verify that nameplates and all safety warning, caution signs and decals provided with the equipment are in place and clearly visible.

Visually inspect the boom mower before each start up. Check for loose or missing parts and any damage that may have occurred during moving or shipping.

Review all skidsteer pre-start instructions, and verify that all recommended steps and procedures have been followed.

.

5.2 Hydraulic Connections

⚠ WARNING

Pressurized fluids can penetrate the skin.

Disconnect and lock out power source before disconnecting and/or connecting hydraulic hoses.

The boom mower is equipped with three hoses. You must connect the pressure, return and case drain hoses from boom mower to skidsteer hydraulic couplers.

Boom mowers are not equipped with hydraulic couplers. Install couplers and connect your skidsteer pressure, return and case drain hoses to the boom mower hoses. Install your couplers to the hoses listed in the table below.

Fitting Size	Hose Description	Qty.
3/4 JIC FM	Pressure & Return	2
1/2 JIC FM	Case Drain	1

Identify the pressure port hose and connect your hoses to the boom mower hoses.

Maximum allowable case pressure is 100 psi. Case drain is required.

5.3 Machine Components

A. Quick Attach
B. Hydraulic Pressure Gauge
C. Operators Manual Holding Tube
D. Adjustable Floating Deck Roller
E. Rotor
F. Flail Teeth
G. Height Adjustable Tire
H. Hydraulic Motor
I. Hydraulic Valves

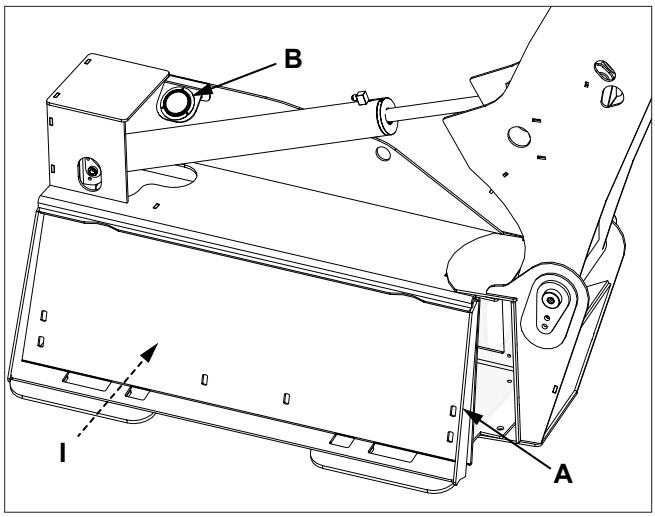

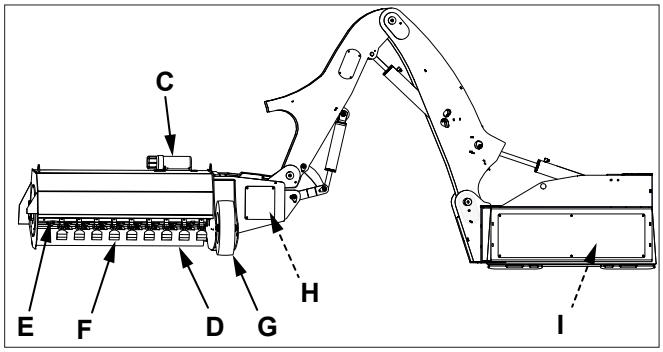

5.4 Control Boxes

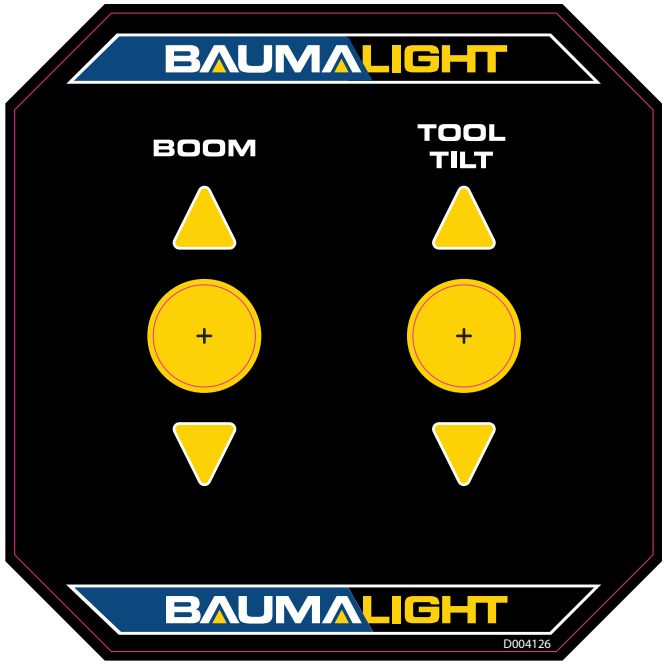

SWA Directional Control Box

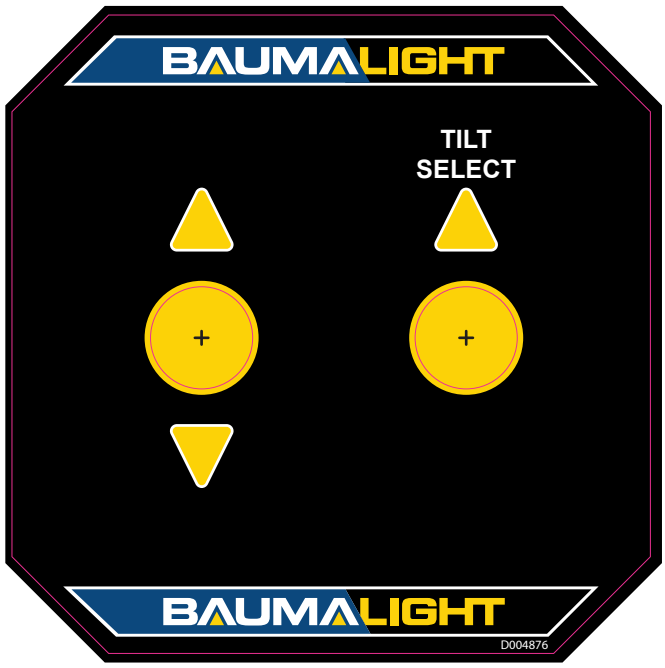

SWA Selector Control Box

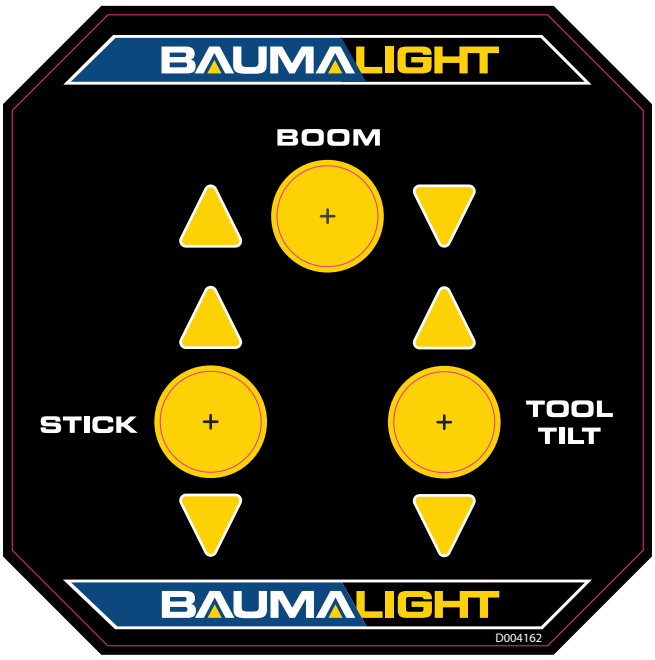

SWF Directional Control Box

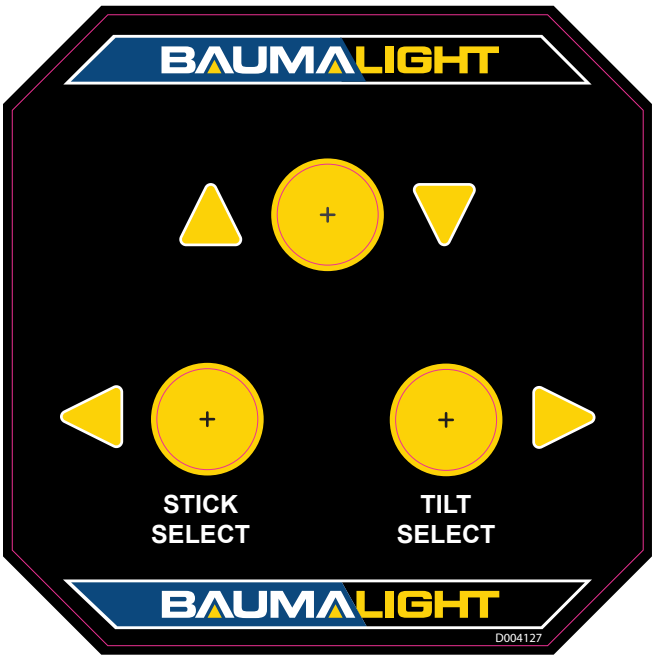

SWF Selector Control Box

5.5 Attach Boom Mower

WARNING

To prevent injury or machine damage put transmission in park.

Never position yourself between skidsteer and boom mower.

Only experienced and properly trained operator may operate skidsteer and boom mower.

1. Read and follow all safety instructions.
2. Attach skidsteer to boom mower. See skidsteer operator's manual.
3. Connect pressure, return and case drain hydraulic hoses. Verify hydraulic hoses are clear of pinch areas and moving parts.
4. Move to a clear open area to test functions.

5.6 Transporting

1. Verify all reflectors and Slow Moving Vehicle (SMV) sign are visible.
2. Verify hydraulics to boom mower are disengaged.
3. Fold boom mower into transport position.
4. Raise skidsteer boom slightly off the ground.
5. Travel at a reasonable and safe speed.

WARNING

Prevent serious injury or death.

Never detach skidsteer from boom mower with mower in transport position.

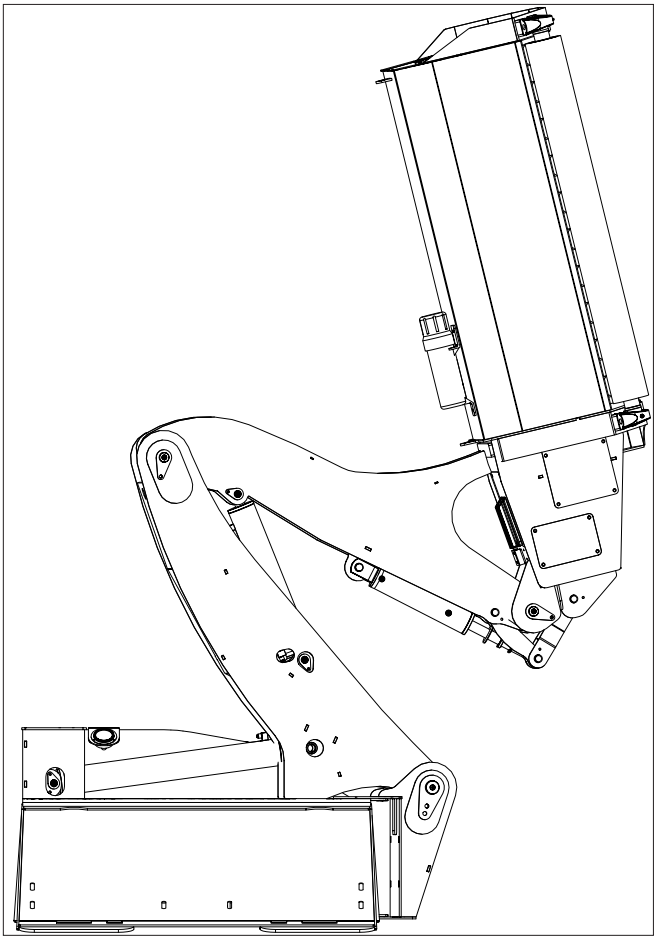

Transport Position

5.7 First Time User Tips

Unfold boom mower to the operating position.

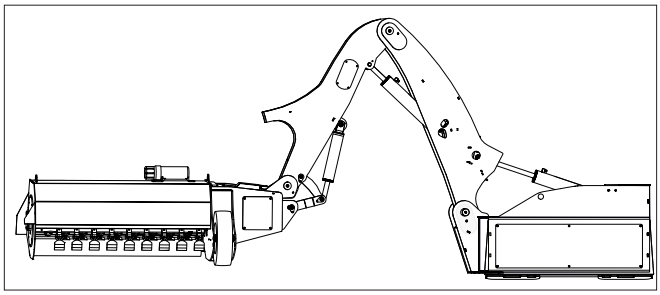

Operating/Storage Position

Operate all functions in a clear area at low speed to get a good feel for the controls.

Choose low density brush and move into it slowly, do not expect to get the first area done fast.

Each operator must experiment to find a technique that works for them in their application.

Although it is best to mow when it is dry, the machine works well in wet conditions. However, you must travel slower to do the same quality cutting. It will also be necessary to clean the machine more frequently to prevent clogging.

WARNING

Always stop engine and remove key before leaving operators seat.

5.8 Field Operation

WARNING

Prevent serious injury or death caused by unexpected movement:

1. **Park on a level surface.**
2. **Lower boom mower to ground or place in transport position.**
3. **Engage parking brake.**
4. **Shut off engine and remove key.**

WARNING

Keep shields and guards in place at all times. Do not operate without shields and guards.

Do not wear loose fitting clothing.

Do not allow riders.

WARNING

Never operate boom mower when other people are in the vicinity.

Debris can be thrown from cutting area.

1. Inspect work area to verify there are no rocks, metal or other debris before cutting.
2. Attach boom mower to skidsteer.

WARNING

Prevent serious injury or death.

Skidsteer must be equipped with a forestry guard to protect the operator.

WARNING

Prevent serious injury or death.

Operation with raised boom may result in capsizing carrier machine.

3. Unfold boom mower to the operating position.
4. Lower boom mower so deck roller and tire are close to, or on the ground. Keep skidsteer boom close to the ground.
5. Set engine speed to low idle and engage boom mower.
6. Slowly increase engine speed to high idle.
7. Monitor pressure gauge (A) closely during startup and throughout the cutting process.

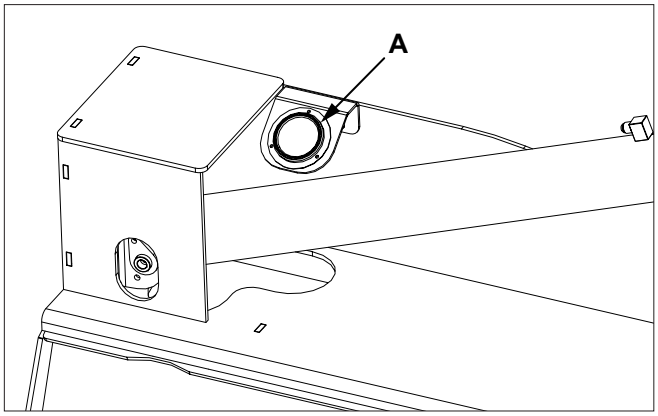

When first starting the rotor, hydraulic pressure on gauge (A) will jump from zero to maximum as the motor works to speed up the rotor. It can take 5-10 seconds for the rotor to reach operational speed. Do not attempt to use the boom mower before operational speed is reached.

As operational speed is reached, pressure will drop to 500 - 1000 psi. Monitor pressure gauge during operation. Maximum cutting performance is with hydraulic pressure between 2000 - 3000 psi.

8. Verify boom mower is operating smoothly and start travel.
9. If boom mower stalls, stop movement, slightly raise boom mower and allow rotor to regain speed. Slow ground speed to prevent further stalling.

WARNING

Moving parts can crush and cut.

Keep clear of moving components.

Lockout skidsteer before clearing jams.

10. Rotor will continue to spin freely when hydraulic power is disengaged. The rotor can be slowed by setting rotor against the soft ground and letting the friction stop the rotor. Do not set rotor on hard ground, stone or concrete.

5.9 Height Adjustment

WARNING

Prevent serious injury or death caused by unexpected movement:

1. **Park on a level surface.**
2. **Lower boom mower to a comfortable or preferred level close to ground.**
3. **Engage parking brake.**
4. **Shut off engine and remove key.**
5. **Support boom mower with an adequate device.**

1. Park skidsteer and boom mower on a level surface.
2. Lower boom mower to a comfortable or preferred level close to ground. Support boom mower with an adequate device to prevent mower falling while working under mower.
3. Shut off engine and remove key.
4. Remove deck roller bearing block (A) mounting hardware.
5. Move deck roller to desired position and install hardware. Moving deck roller forward will increase boom mower cutting height.

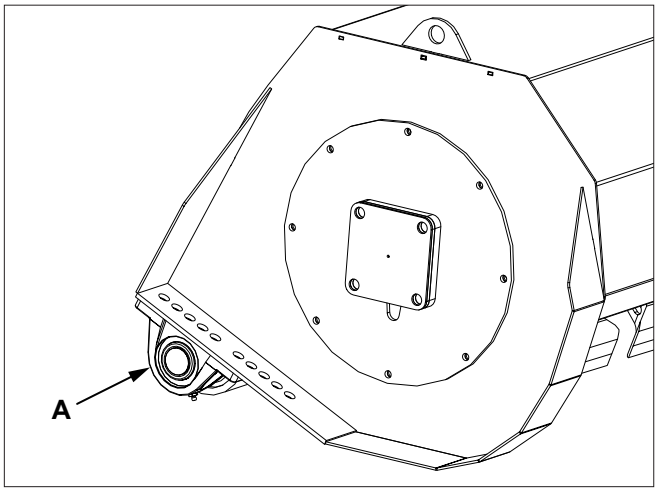

6. Boom mower should be level front to back. If necessary, remove mounting hardware from tire (B) and move to upper or lower hole as needed. Install mounting hardware.

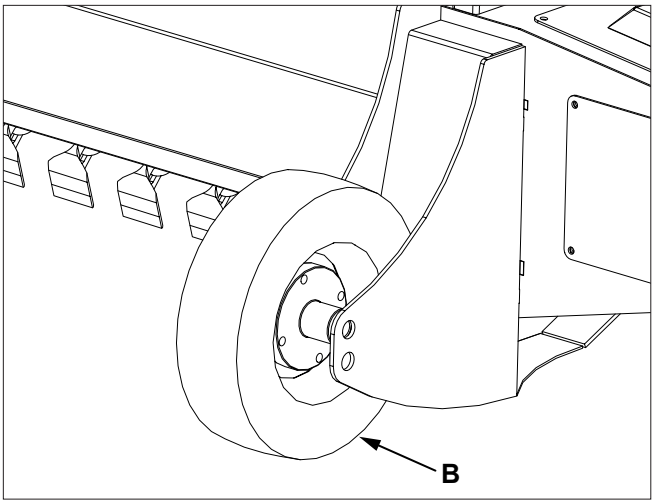

5.10 Hydraulic Adjustment

WARNING

Prevent serious injury or death caused by unexpected movement:

1. **Park on a level surface.**
2. **Lower boom mower to ground.**
3. **Engage parking brake.**
4. **Shut off engine and remove key.**

1. Operate skidsteer and boom mower until hydraulic oil is at operating temperature.
2. Park skidsteer on a level surface.
3. Lower boom mower to the ground.

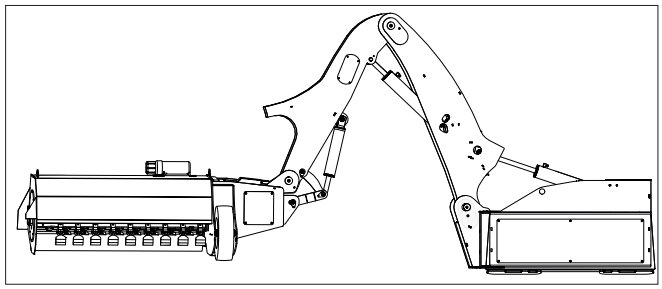

Operating/Storage Position

4. Shut off engine and remove key before making adjustments.

Note: *Hydraulic adjustments are to be done by the operator, not a dealer technician. The operator will want to gradually adjust settings to their own preferences over the course of many hours of mowing. Baumalight will not cover time to diagnose and adjust hydraulic settings.*

Counter balance valve is supplied by two manufactures. Both valves function the same, but are different in appearance.

Closing counter balance valve will block oil flow one way, allowing cylinder to only work one way. If cylinder is collapsing, valve is open too far. Pressure on gauge will increase when lowering cylinders.

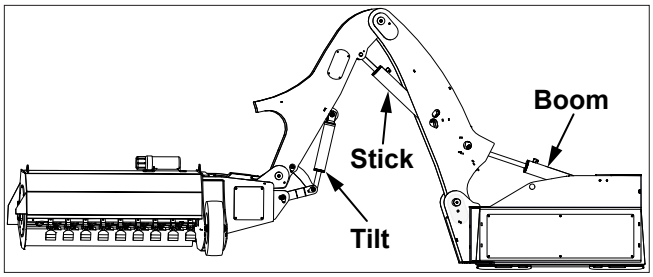

(A) Tilt Adjust - If tilt cylinder will not hold its raised position, loosen lock knob (B) and turn valve (A) inward (clockwise) until tilt cylinder will hold its position. Tighten lock knob (B).

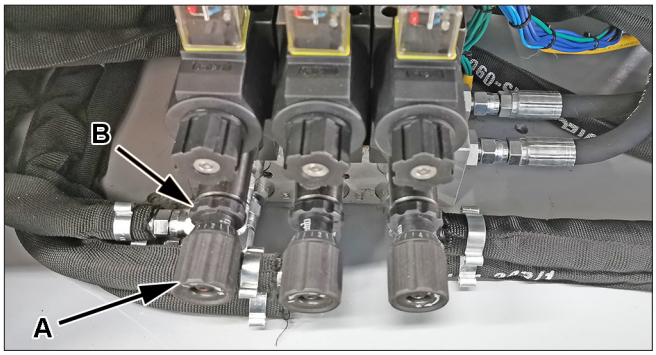

(C) Flow Adjust - Adjusting the flow determines how much oil is sent to cylinders and rotor. The more oil that is sent to the rotor will result in cylinders moving slower. If more oil is sent to the cylinder, rotor speed may decrease when cylinder is activated. Typical adjustment is 1 full turn out from closed position.

(D) Pressure Relief - Max out any cylinder and adjust pressure until gauge reads 2000 psi (138 bar) or slightly over. Relief must be set lower than skidsteer relief. Image below is shown with quick attached plate transparent to illustrate pressure relief adjustments. Adjusters would be on the back side of valve block when accessing through removable plate on front side of mower.

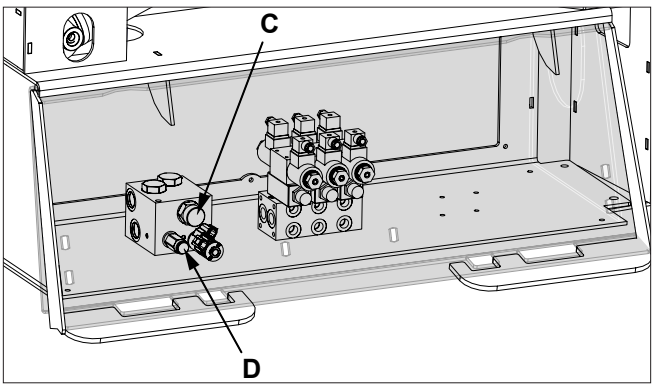

(E) Boom Adjust - If boom cylinder will not hold its raised position, loosen lock knob (F) and turn valve (E) inward (clockwise) until boom cylinder will hold its position. Tighten lock knob (F).

(G) Stick Adjust - If stick cylinder will not hold its raised position, loosen lock knob (H) and turn valve (G) inward (clockwise) until stick cylinder will hold its position. Tighten lock knob (H).

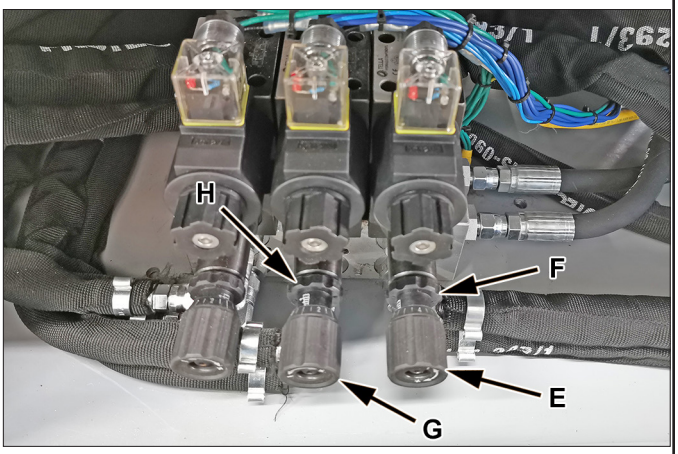

5.11 Detach Boom Mower

⚠ WARNING

Prevent death or serious injury caused by unexpected movement:

1. **Park on a level surface.**
2. **Lower boom mower to ground.**
3. **Engage parking brake.**
4. **Shut off engine and remove key.**

1. Park skidsteer on a level surface.
2. Lower boom mower to the ground.

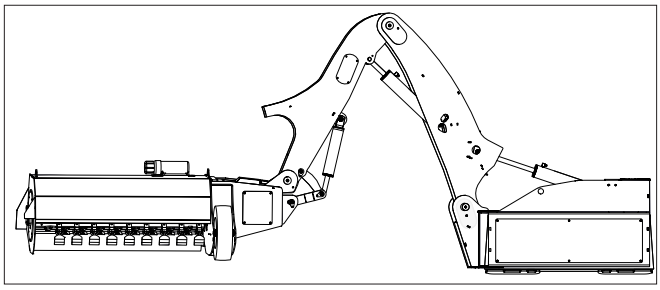

Operating/Storage Position

3. Shut off engine and remove key.
4. Disconnect hydraulic hoses and electrical connector.
5. Detach skidsteer from boom mower. See skidsteer Operator's Manual.

6 SERVICE AND MAINTENANCE

6.1 Daily

WARNING

Prevent serious injury or death caused by unexpected movement:

1. **Park on a level surface.**
2. **Lower boom mower to ground.**
3. **Engage parking brake.**
4. **Shut off engine and remove key.**

Inspect the unit for buildup of dirt, mulch and debris. Clean out as needed.

6.2 Every Four Hours

WARNING

Prevent serious injury or death caused by unexpected movement:

1. **Park on a level surface.**
2. **Lower boom mower to ground.**
3. **Engage parking brake.**
4. **Shut off engine and remove key.**

Check cutting edge (A) of teeth for wear and damage. Keep cutting teeth in good condition. Unit will cut faster and remaining teeth will last longer if broken teeth are replaced.

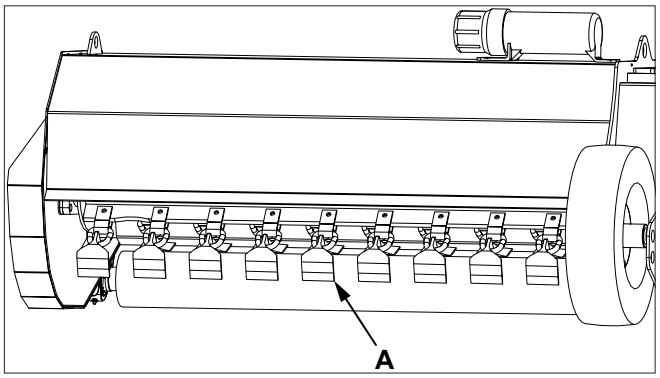

6.3 Replace Cutting Teeth

WARNING

Prevent serious injury or death caused by unexpected movement:

1. **Park on a level surface.**
2. **Lower boom mower to a comfortable or preferred level to access cutting teeth.**
3. **Engage parking brake.**
4. **Shut off engine and remove key.**
5. **Support boom mower with an adequate device.**

1. Park skidsteer and boom mower on a level surface.
2. Lower boom mower to a comfortable or preferred level to access cutting teeth. Support boom mower with an adequate device to prevent mower falling while working under mower.
3. Shut off engine and remove key.
4. Inspect cutting teeth for damage and wear.
5. Replace individual teeth as needed.
6. Remove mounting hardware and bracket (A) with tooth (B). Install new tooth on bracket (A) and install on rotor.
7. Install bolt and tighten to 170 lb-ft (230 Nm) of torque.

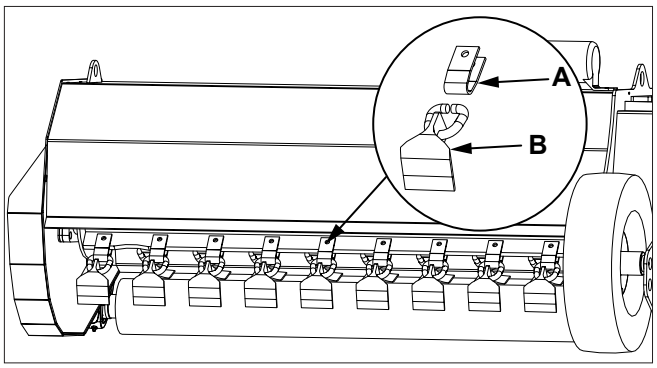

Note: *Parts breakdown can be found on Baumalight's website.* www.baumalight.com

6.4 Lubrication

WARNING

Prevent serious injury or death caused by unexpected movement:

1. **Park on a level surface.**
2. **Lower boom mower to ground.**
3. **Engage parking brake.**
4. **Shut off engine and remove key.**

Pump grease into grease fittings located at all pivot points and cylinder ends every month.

The rotor bearings are factory lubricated with a lithium or lithium complex base grease which is suitable for most applications. Select a grease that is compatible with a lithium or lithium complex grease.

The bearings should contain as much grease as speed will permit. A full bearing with consequent slight leakage through the seal is the best protection against contaminant entry.

The following table is a general guide for normal operating conditions. Extreme situations may require a change in lubricating periods as dictated by experience.

Generally, a lower quantity of grease at frequent intervals is more effective than a greater quantity at extended lubrication intervals.

Using the table below, the boom mowers operate in the 1501-2000 rpm range. Determine the lubrication interval based on the hours of use per day. Typical lubrication quantity is 1 pump from a standard grease gun.

Lubrication Interval In Weeks								
Hours Run Per Day	1 To 250 RPM	251 To 500 RPM	501 To 750 RPM	751 To 1000 RPM	1001 To 1500 RPM	1501 To 2000 RPM	2001 To 2500 RPM	2501 To 3000 RPM
8	12	12	10	7	5	4	3	2
16	12	7	5	4	2	2	2	1
24	10	5	3	2	1	1	1	1

In the higher speed ranges too much grease will cause overheating. The amount of grease that the bearing will take for a particular high speed application can be determined only by experience. If excess grease in the bearing caused overheating, it will be necessary to remove grease fitting to permit excess grease to escape.

6.5 Motor Shaft Seal

To prevent hydraulic motor damage, the motor shaft seal is designed to fail if case pressure exceeds 100 psi (689 kPa) running pressure and 500 psi (3447 kPa) momentary pressure.

If motor shaft seal (A) has failed, verify case drain line is free flow to sump or reservoir. Also check drain line for blockage. Correct any problems before replacing shaft seal.

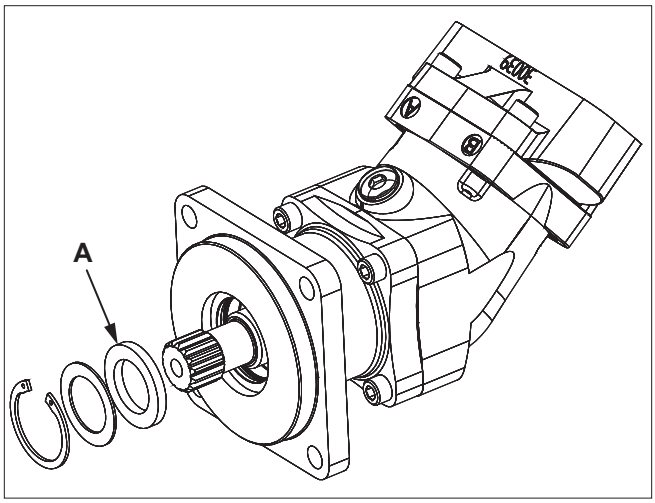

Check hydraulic pressure on case drain line. Maximum pressure on case drain line is 100 psi (689 kPa). Exceeding maximum pressure (100 psi (689 kPa) running pressure and 500 psi (3447 kPa) momentary pressure) may result in motor seal and over hung load adapter seal failure.

Order replacement seal kit from Baumalight and follow instructions provided with kit.

Motor Shaft Seal Replacement manual can be found at www.baumalight.com/support

Note: *Parts breakdown can be found on Baumalight's website.* www.baumalight.com

6.6 Zero Leak Case Drain Relief Valve

The boom mower is equipped with a case drain line that is to be routed to the skidsteer hydraulic reservoir.

It is normal for a hydraulic motor to have a slight amount of internal leakage.

The case drain line will allow this internal leakage to be returned to the reservoir, preventing excessive pressure on the motor seal.

The boom mower may be equipped with a zero leak relief valve (A) installed in the case drain line.

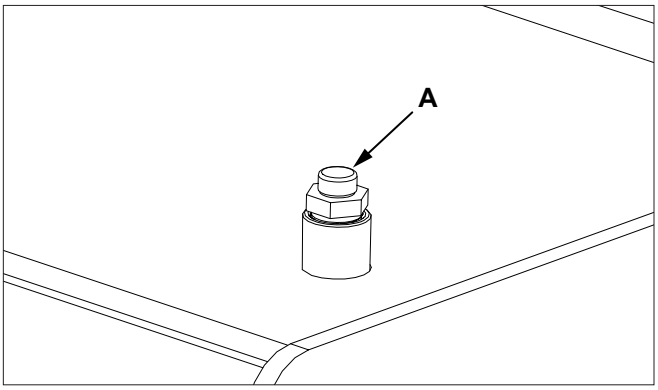

If the case drain line is not connected or becomes obstructed, the zero leak relief valve will vent the pressurized hydraulic fluid to the atmosphere. The zero leak relief valve will self reset after hydraulic pressure reduced.

WARNING

Pressurized fluids can penetrate the skin.

Keep bystanders away from machine during operation.

A tiny, almost invisible leak can penetrate the skin, thereby requiring immediate medical attention.

If hydraulic fluid is coming out of the zero leak relief valve, shut down machine immediately. Inspect the case drain line connection and lines. Contact your dealer if case drain lines and connection are good.

NOTICE

Environmental hazard.

Clean up any spilled hydraulic fluid immediately.

A properly installed case drain protected by a zero leak relief valve will save the work of replacing the motor shaft seal and also improve the efficiency of your hydraulic system.

7 TROUBLESHOOTING

PROBLEM	CHECK	SOLUTION
Rotor does not spin.	Rotor jammed.	Remove material from rotor / teeth.
	Verify hydraulic hoses are connected.	Connect hoses.
No hydraulic functions.	Verify hydraulic hoses are connected.	Connect hoses.
Skidsteer is not able to lift boom mower.	Skidsteer is too small.	Use proper size skidsteer.
Excessive vibration.	Cutting teeth worn or missing. Debris packed on rotor / teeth.	Replace worn, broken or missing cutting teeth. Remove debris.
Boom or tool tilt moves slow or stutters when fully extended or retracted.	On-board pressure relief valve is set higher than machine relief valve.	Adjust on-board relief valve to a lower pressure setting than machine relief valve. See Section 5.10 Hydraulic Adjustment.

BAUMALIGHT ATTACHMENT WARRANTY

The product is warranted to be free of defects in materials and workmanship under normal use and service, for a period of one year from the date of purchase. This warranty covers parts and labor, but does not cover misuse, negligence, dealer travel time and shipping costs to and from the dealer.

Replacement of individual parts vs. assemblies are at the discretion of the manufacturer.

Warranted replacement parts will be shipped to the customer free of charge via ground shipping. If expedited shipping requested, the customer will be charged the difference between ground shipping and the cost of expedited shipping. Damage in transit is not covered by warranty.

Baumalight products purchased new must be registered for warranty at *https://baumalight.com/support/product registration*.

Warranty claims must include the bill of sale to the original purchaser.

This product must be operated and maintained in accordance with the Operating and Maintenance Instructions supplied with this unit.

Under no circumstances will the manufacturer be liable for any consequential damage or expense of any kind, including loss of profits. The manufacturer is under no circumstances liable for carrier unit damage of any kind. The manufacturer is not liable for the maintenance of the product. Baumalight will not cover time to diagnose and repair compatibility issues between carrier and attachment.

When receiving a shipment from the manufacturer:

1. Compare items received with the carriers bill of lading.
2. Check for damage before signing for the shipment. If damage is found, note damage on carriers bill of lading and photograph the damage.

This warranty is extended only to the original purchaser and there never is any warranty on anything sold through auction.

Warranty repairs may be done by the end user if the end user is willing and capable.

The Manufacturer's Liability is limited to repair of the product and/or replacement of parts and is given to the purchaser in lieu of all other remedies including incidental and consequential charges. There are no warranties, expressed or implied other than those specified herein. For the nearest Authorized Service Center call the manufacturer.

The allowable time for dealers to perform some repairs can be found on our website in the support section under Service And Instruction Videos & Support.

Model Number: _____ S/N:_____

Date of Purchase: _____ Owner's Name_____

MTB MFG INC.
CORPORATE HEADQUARTERS
4575 Powell Rd.,Wallenstein,
Ontario Canada N0B 2S0
www.baumalight.com