BAUMALIGHT™

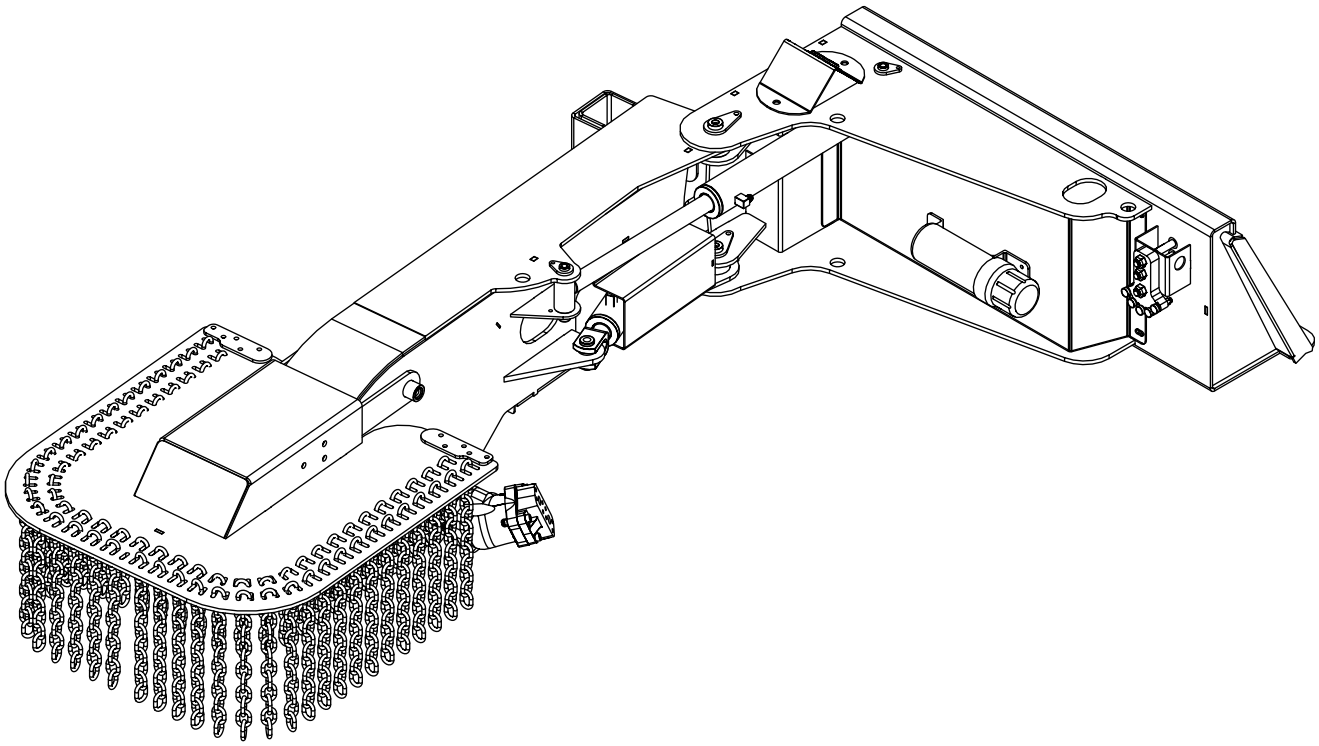

BAUMALIGHT™

S40 Stump Grinder

OPERATOR'S MANUAL

Issue Date: October 2026

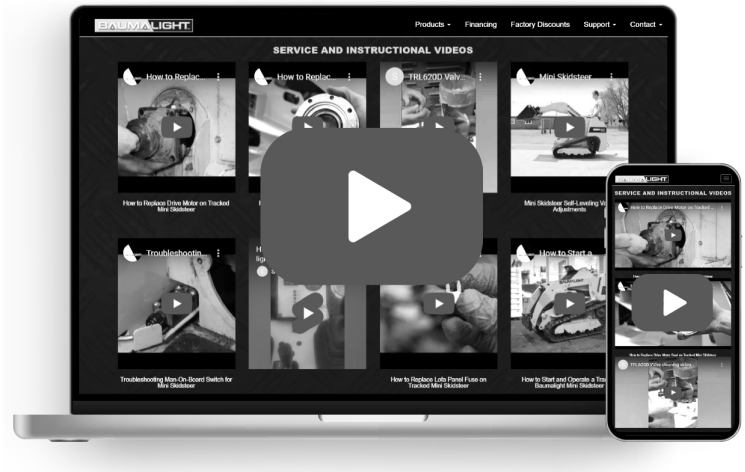

Service And Instructional Videos

Find online at baumalight.com/support

Following is a list of videos and documents available on Baumalights website and also on YouTube to help and enhance maintaining the stump grinder. The list below was current at the time this manual was issued. Additional content may be available.

Activity ID Number	Activity Name	Description	Item Available
318	Hydraulic Motor.	Breaking In Replacement Hydraulic Motor.	Video
392	Swing Cylinder Trouble Shooting.	Swing Cylinder Will Not Move.	Video
281	Skidsteer Case Drain Back-Pressure.	What May Cause Skidsteer Case Drain Back-Pressure.	Video
282	Skidsteer Case Drain Back-Pressure.	Testing Case Drain Back-Pressure With Pressure Gauge.	Video
283	Skidsteer Case Drain Back-Pressure.	Testing Case Drain Back-Pressure With Open Coupler.	Video
104	Remove Seal.	Remove Seal On Motor Or Load Adapter.	Video
123	Zero-Leak Relief Valve.	Demonstrating And Troubleshooting Zero-Leak.	Video
142	Replace Motor Shaft Seal.	Replace Shaft Seal On Piston Motor.	Video
87	Inserting A Pin In A 8 And 14 Pin Connector.	Changing Pins In Aux Receptacle.	Video
435	Hydraulic Cylinder.	Replacing Seals On Hydraulic Cylinder.	Video
447	John Deere P Series.	Aux Pin Out Support.	Video
76	Stump Grinder Trouble Shooting.	No Power Trouble Shooting.	Document
477	Communicating Measurements.	Why Not To Send Pictures Of Measuring Tapes To Communicate Measurements.	Video

TABLE OF CONTENTS

1 INTRODUCTION 4
1.1 Overview 4
1.2 Intended Use And Foreseeable Misuse 4
2 SAFETY 5
2.1 Safety Alert Symbol And Safety Words 5
2.2 Operational Hazards 5
Prepare for Emergencies 6
Replace Safety Signs 6
Do Not Allow Riders 6
Lower Operating Speed 6
Avoid Rollover 6
Avoid Powerlines & Underground Utilities 7
Detach Stump Grinder Safely 7
Hazards From Modifying Equipment 8
2.3 Maintenance Hazards 9
3 SAFETY SIGNS 10
4 OPERATION 12
4.1 Preparation For Use 12
4.2 Pre-Operation Check List 12
4.3 Machine Components 13
4.4 Attaching Stump Grinder 13
4.5 Carbide Teeth Break-In 14
4.6 Transporting 14
4.7 Detaching Stump Grinder 15
4.8 Hydraulic Adjustments 15
4.9 First Time User Tips 16
4.10 Field Operation 17
5 SERVICE AND MAINTENANCE 19
5.1 Rotate Cutting Teeth 21
5.2 Replace Cutting Teeth 22
5.3 Replace Hydraulic Hoses 22
5.4 Replace Rotor 23
5.5 Every 10 Hours 23
6 TROUBLESHOOTING 24
7 STORAGE 25
7.1 Storing Grinder 25
7.2 Removing From Storage 25
8 WARRANTY 26

1 INTRODUCTION

1.1 Overview

Congratulations on your choice of a Baumalight Skidsteer Stump Grinder to complement your stump grinding operation. This equipment has been designed and manufactured to meet the needs of a discriminating buyer for efficient grinding of stumps.

The rotor is powered by the hydraulics on your skidsteer with the swing cylinders activated by the standard remote hydraulic connectors on the skidsteer.

Grease zerks and replaceable bushings are provided at major pivot points for extended service life.

The debris shield is standard equipment on all stump grinders. It is recommended that the stump grinder never be operated without one.

Safe, efficient and trouble free operation of your stump grinder requires that you and anyone else who will be operating or maintaining the stump grinder, read and understand the Safety, Operation, Maintenance and Troubleshooting information contained within the Operator's Manual.

This manual covers the Baumalight S40 Stump Grinder. Use the Table of Contents as a guide to locate required information.

Keep this manual handy for frequent reference and to pass on to new operators or owners. Contact your Baumalight dealer if you need assistance, information or additional copies of the manuals.

When this machine is worn out and no longer in use, it should be returned to the retailer or other party for recycling.

OPERATOR ORIENTATION - The directions left, right, front and rear, as mentioned throughout this manual, are as seen from the skidsteer driver's seat and facing in the direction of travel.

1.2 Intended Use And Foreseeable Misuse

The stump grinder is designed to be used on site to remove softwood and hardwood tree stumps by reducing the stumps to chips and dust.

The stump grinder is designed to be used by experienced operators, trained in the safe operation of a skidsteer and trained in the hazards related to using the stump grinder and the safe use of the grinder for the intended purpose. Operators will require personal protective equipment to reduce the risk from some hazards that cannot be completely eliminated or controlled by the design of the tool.

Each model in the family is intended to be used within the stump size limits shown in the catalog and in the implement specifications in the manual.

Care is required to ensure that the stump grinding tool will not come across metallic objects, stones or other materials harder than a typical stump while grinding.

The stump grinder is not designed for use in hazardous atmospheres where there is a risk of fire or explosion due to flammable gases or vapors. Use in hazardous, explosive atmospheres is prohibited.

Serious injury or death of the operator or bystanders may be caused if the tool is misused. Misuse may also cause damage to the skidsteer carrying the implement.

2 SAFETY

2.1 Safety Alert Symbol And Safety Words

You must read, understand and follow the instructions given by the operating unit manufacturers, as well as the instructions in this manual.

The safety information in this manual is denoted by the safety alert symbol:

This symbol means ATTENTION! BECOME ALERT! YOUR SAFETY IS INVOLVED!

The level of risk is indicated by the following signal words:

DANGER

DANGER - Indicates a hazardous situation, which, if not avoided, WILL result in death or serious injury.

WARNING

WARNING - Indicates a hazardous situation, which, if not avoided, could result in death or serious injury.

CAUTION

CAUTION - Indicates a hazardous situation, which, if not avoided, could result in minor or moderate injury.

NOTICE

NOTICE - Indicates a situation that could result in damage to the equipment or other property.

2.2 Operational Hazards

WARNING

Prevent serious injury or death.

Read and understand this manual before operating stump grinder.

Always stop engine and remove key before leaving operators seat.

Never allow anyone near the stump grinder during operation.

Travel at a safe speed.

WARNING

Prevent serious injury or death from moving parts.

Moving parts can crush and dismember.

Do not operate without guards and shields in place.

Disconnect and lock out power source before adjusting or servicing.

WARNING

Use stump grinder only for the designed applications.

Any other use may result in personal injury, damage to equipment and may void the warranty.

⚠ WARNING

Prevent serious injury or death.

Verify stump grinder is attached to skidsteer before operation or transport.

Carefully read all safety messages in this manual and on equipment safety signs. Keep safety signs in good condition and replace missing or damaged safety signs.

New equipment components and repair parts must include the current safety decal.

Learn how to properly operate equipment. NEVER operate or work around this equipment without proper instruction, while fatigued or under the influence of alcohol, prescription or non-prescription medication or if feeling ill.

Keep your equipment in proper working condition.

Know the regulations and laws that apply to you and your industry. This manual is not to replace any regulations or laws. Additional information may be found at: www.asae.org or www.osha.gov.

If you do not understand any part of this manual, contact your Baumalight dealer.

Prepare for Emergencies

- Be prepared in case of emergencies.
- Keep a fire extinguisher and first aid kit close to the machine.
- Keep emergency phone numbers close to your phone.
- Know your address so emergency services can locate you if an emergency arises.

Replace Safety Signs

- Replace missing or damaged safety signs.
- Safety signs are identified in Section 3 of this manual.
- Replacement safety signs are available from your Baumalight dealer.

Do Not Allow Riders

- NEVER lift or carry anyone with stump grinder.
- NEVER use stump grinder as a work platform.
- NEVER allow passengers on stump grinder.

Lower Operating Speed

- Lower operating speed while loading, unloading or performing heavy operations.
- Keep load low and move at slow speeds on rough or uneven terrain.

Avoid Rollover

The equipment may rollover, resulting in death or serious injury. To help prevent rollover:

- Travel at a slow speed.
- Avoid sharp turns & sudden movement on slopes.
- Carry loads close to the ground.
- Avoid holes, ditches and other obstructions which may cause equipment to rollover.
- Balance load so weight is evenly distributed and load is stable.
- Use caution when operating on slopes and do not operate on excessively steep slopes.
- Do not exceed load capacity of equipment.

Avoid Powerlines & Underground Utilities

- Check clearance before raising equipment.
- Have local utilities locate and mark buried wires, cables, pipelines and other hazards before grinding.

DANGER

Prevent electrocution.

Death or serious injury can result if equipment comes near or contacts power lines.

Electrocution can occur without direct contact.

DO NOT leave the operator's seat if any part of the equipment contacts electric lines or cables.

Detach Stump Grinder Safely

Detach stump grinder on a firm and level surface with parking stand deployed. Stump grinder may fall over if detached on sloping or soft surface. Be sure people, livestock and pets are clear of machinery.

Relieve hydraulic pressure before disconnecting hydraulic hoses. See your skidsteer Operator's Manual.

Raised Attachment

WARNING

Crushing hazard.

Raised, unsupported stump grinder can fall, resulting in death or serious injury.

Never enter the area under a raised stump grinder.

A raised stump grinder can lower unexpectedly, resulting in death or serious injury.

NEVER enter area under a raised stump grinder.

Lower stump grinder to ground, engage parking brake, shut off engine and remove key before servicing.

Avoid Loud Noise

WARNING

Prolonged exposure to loud noise can cause impairment or loss of hearing.

Wear a suitable hearing protective device such as earmuffs or earplugs to protect against objectionable or uncomfortable loud noises.

Hazards From Modifying Equipment

Do not make any alterations to your stump grinder. Altering the equipment may cause unsafe conditions and may void the manufacturer's warranty.

Avoid High Pressure Fluids

WARNING

Pressurized fluids can penetrate the skin.

Hydraulic hoses can fail from age, damage and exposure.

Use body and face protection while searching for leaks. A tiny, almost invisible leak can penetrate the skin, thereby requiring immediate medical attention.

Use wood or cardboard to detect hydraulic leaks, never use your hands.

Escaping fluid under pressure can penetrate the skin causing serious injury.

Prevent the hazard by relieving pressure (See skidsteer Operator's Manual.) before connecting or disconnecting hydraulic lines. Verify all connections are tight before applying pressure.

Search for leaks with a piece of cardboard or wood.

Protect hands and body from high pressure fluids. If an accident occurs, see a doctor immediately. Any fluid injected into the skin must be surgically removed within a few hours or serious infection may result.

Avoid Wood Dust Inhalation

WARNING

Drilling, sawing, sanding or machining wood products can expose you to wood dust, a substance known to the State of California to cause cancer.

Avoid inhaling wood dust or use a dust mask or other safeguards for personal protection. For more information go to www.P65Warnings.ca.gov/wood.

WARNING

Wear an approved dust mask or respirator.

Follow local, state and federal regulations.

2.3 Maintenance Hazards

Before servicing, park machine on a firm and level surface, set parking brake, chock wheels, and place a “Do Not Operate” tag on control panel. Read and understand this manual. If you do not understand any part of the manual, contact your Baumalight dealer.

Always wear face and/or eye protection, safety shoes, and other protective equipment appropriate for the job.

Do not make unauthorized modifications. Contact your Baumalight dealer before you weld, cut/drill holes, or make any other modifications.

WARNING

Moving parts can crush and cut.

Keep clear of moving components.

Follow lockout procedure before servicing.

WARNING

Crushing hazard.

Before performing inspections, service or maintenance:

- **Park machine on firm, level surface.**
- **Set parking brake**
- **Turn engine off.**
- **Place Do Not Operate tag on engine controls.**

WARNING

Entanglement hazard.

Keep clear of moving components.

Wear proper protective equipment appropriate for the job.

WARNING

Burn hazard.

Hot and high pressure hydraulic oil.

Allow oil to cool before servicing.

WARNING

Drilling, sawing, sanding or machining wood products can expose you to wood dust, a substance known to the State of California to cause cancer.

Avoid inhaling wood dust or use a dust mask or other safeguards for personal protection. For more information go to www.P65Warnings.ca.gov/wood.

WARNING

Wear an approved dust mask or respirator.

Follow local, state and federal regulations.

3 SAFETY SIGNS

The two and four panel safety decals are pictorial and have a yellow background. The panel with a triangle indicates the potential hazard. The panel without a triangle indicates how to avoid the hazard.

If any of the decals are missing, are damaged, or if you do not understand the decal, please contact your dealer.

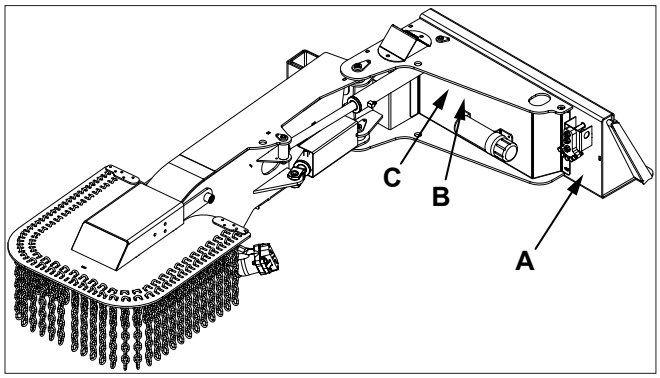

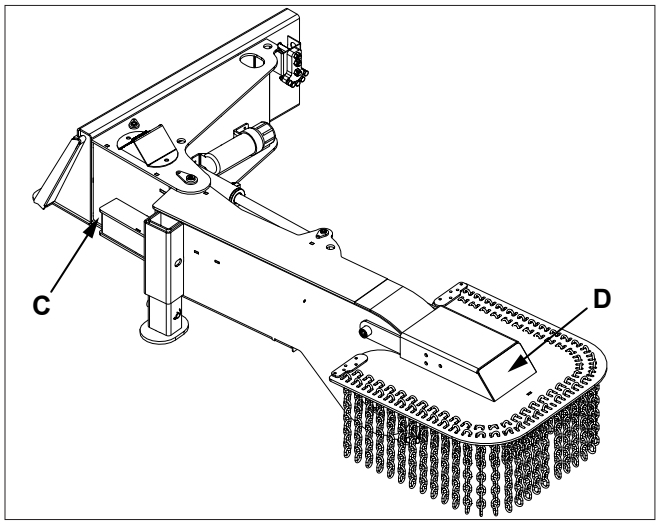

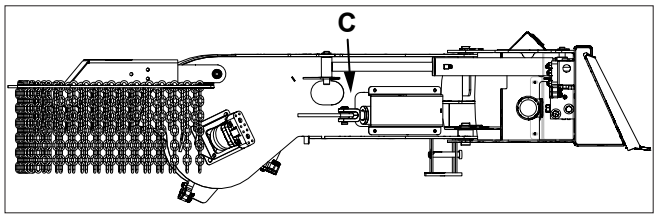

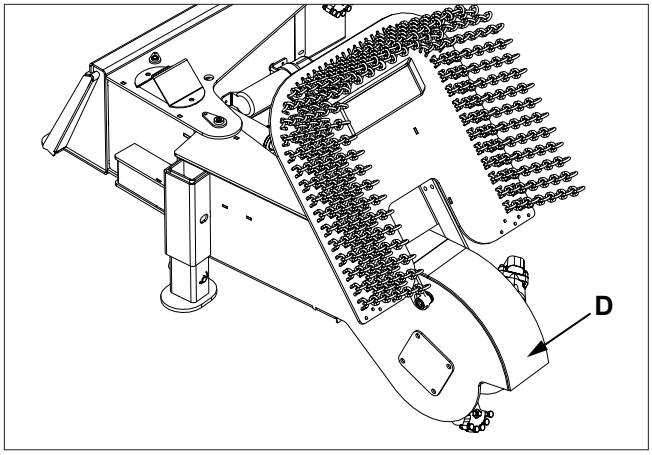

A. D005252 ⚠ WARNING - Read and understand safety signs on the machine and operating instructions in this manual before operating machine.

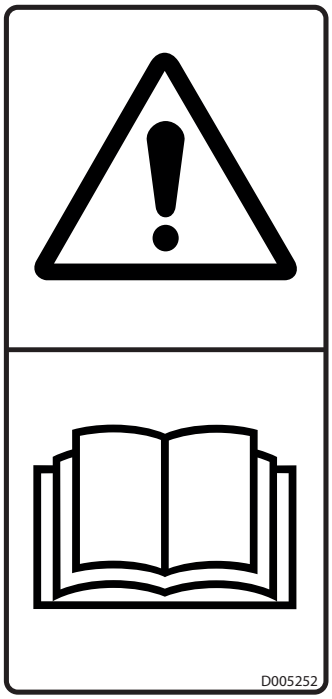

B. D005262 ⚠ WARNING - P65 warning information.

> ⚠ **WARNING:** This product can expose you to chemicals including 1,3-Butadiene and lead, which are known to the state of California to cause cancer and birth defects or other reproductive harm. For more information go to www.P65Warnings.ca.gov.
>
> D005262

C. D005253 ⚠ WARNING - Pressurized fluid hazard. Pressurized fluids can penetrate the skin. Do not check for leaks with your hands. Keep back a safe distance when pressurized.

D. D005255 ⚠ WARNING - Rotating blade hazard. Keep back 75m while machine is operating. Wait for blade to stop before approaching machine.

4 OPERATION

4.1 Preparation For Use

WARNING

Drilling, sawing, sanding or machining wood products can expose you to wood dust, a substance known to the State of California to cause cancer.

Avoid inhaling wood dust or use a dust mask or other safeguards for personal protection. For more information go to www.P65Warnings.ca.gov/wood.

WARNING

Wear an approved dust mask or respirator.

Follow local, state and federal regulations.

Although the stump grinder has been carefully inspected and checked prior to shipment from manufacturer, it is recommended that the unit be thoroughly inspected.

Check all bolts for tightness and remove all shipping tags, bags, skids, and blocking. Check swing frame to ensure that it is free from obstruction and can operate smoothly without binding.

Remove any masking materials affixed during painting. Inspect the skidsteer and any accessory equipment to verify that nameplates and all safety warning, caution signs and decals provided with the equipment are in place and clearly visible.

Verify the quick-tach handles are locked.

Visually inspect the unit before each start up. Check for loose or missing parts and any damage that may have occurred during moving or shipping.

Review all skidsteer pre-start instructions, and verify that all recommended steps and procedures have been followed. Never bar over the rotor, This could cause damage and result in personal injury or equipment damage.

Note: *Always keep the weight of the machine in mind. Never position body in line of impact.*

4.2 Pre-Operation Check List

Check-mark	Check These Items	Frequency
	Verify quick attach handles are locked.	Each operation.
	Check hydraulic fluid level to verify there is sufficient fluid in the system.	Each operation.
	Check hydraulic lines for breaks and punctures.	Each operation.
	Verify hydraulic lines are plugged in securely.	Each operation.
	Verify hydraulic lines cannot bind or be pinched.	Each operation.
	Check cross bolts that secure the pivot pins.	Each operation.
	Check swing control function.	Each operation.
	Verify cutting tips on rotor are tight.	Every 4 hours.
	Grease pins on the blast shield.	Every 6 hours.
	Grease all pivot pins.	Every 10 hours.

4.3 Machine Components

A. Spare Tooth Holder
B. Manual Storage Tube
C. Blast Shield
D. Parking Stand
E. Hydraulic Pressure Gauge
F. Quick Attach
G. Hydraulic Motor
H. Swing Cylinder
I. Swing Cylinder

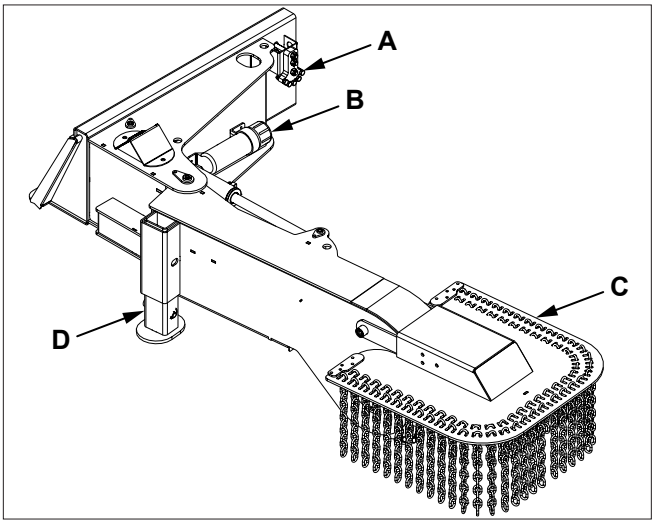

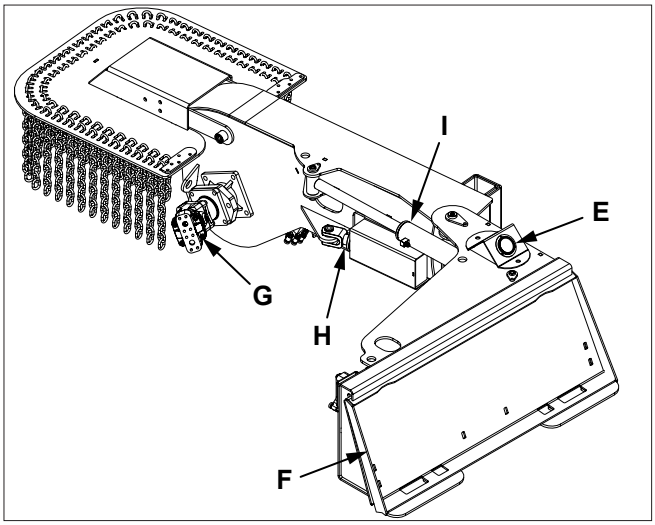

4.4 Attaching Stump Grinder

WARNING

Prevent injury.

Never position yourself between skidsteer and stump grinder.

Only experienced and properly trained operator's should operate the skidsteer and stump grinder.

1. Read all safety instructions.
2. Check for loose teeth or any other loose parts
3. Verify hydraulic lines are clear of pinch areas.
4. Verify there is sufficient visibility and maneuverability to move up to the stump grinder.
5. Verify pins are secure in the correct position.
6. Attach skidsteer to stump grinder. See skidsteer Operator's Manual.
7. Connect hydraulic hoses to the skidsteer hydraulic couplers. See skidsteer Operator's Manual. Verify hydraulic hoses are clear of pinch areas.
8. Connect swing control.
9. Move to a clear open area to test functions.

⚠ WARNING

Pressurized fluids can penetrate the skin.

Hydraulic hoses can fail due to physical damage, age, kinks and exposure. Check hoses regularly. Replace damaged hoses.

Use body and face protection while searching for leaks. A tiny, almost invisible leak can penetrate the skin, thereby requiring immediate medical attention.

Use wood or cardboard to detect hydraulic leaks, never use your hands.

4.5 Carbide Teeth Break-In

During the first few hours of use, avoid hitting stones as much as possible to allow the carbide teeth to wear slightly. This can be done by keeping the rotor above ground level.

New carbide tips are razor sharp and can chip and shatter easily when they hit hard objects. Once the razor sharpness has worn away, the tips do not chip as easily. Observing these precautions will extend the life of the carbide teeth and reduce operating expenses.

4.6 Transporting

⚠ WARNING

To prevent bodily injury from rotating rotor, be sure to disengage hydraulics before transporting grinder.

1. Verify all reflectors and Slow Moving Vehicle (SMV) sign are visible.
2. Verify stump grinder hydraulic flow is disengaged.
3. Operate swing control to fold stump grinder into transport/storage position.

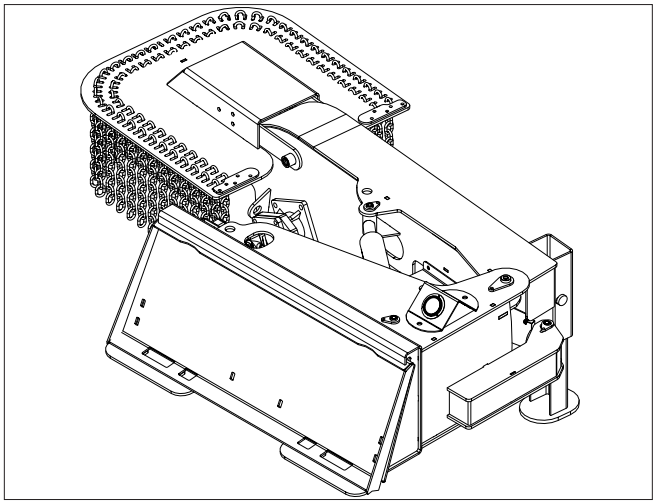

4. Travel at a reasonable and safe speed.

4.7 Detaching Stump Grinder

⚠ WARNING

Prevent serious injury or death caused by unexpected movement:

- **Park machine on firm, level surface.**
- **Set parking brake**
- **Turn engine off.**
- **Place Do Not Operate tag on engine controls.**

1. Park skidsteer on a level surface.
2. Verify stump grinder hydraulic flow is disengaged.
3. Operate swing control to fold stump grinder into transport/storage position.

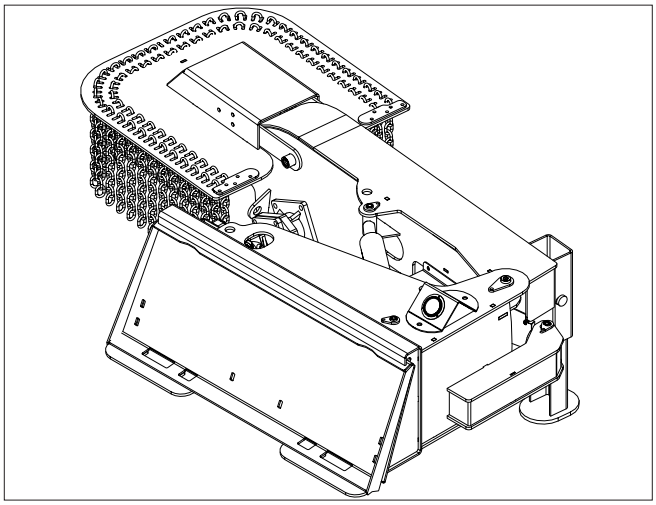

4. Lower grinder so rotor is touching the ground.
5. Lower parking stand to ground and insert pin and lock pin.
6. Shut off engine and remove key.
7. Relieve hydraulic pressure. See your skidsteer Operator's Manual.
8. Disconnect hydraulic hoses and swing control.
9. Disconnect skidsteer from stump grinder. See skidsteer Operator's Manual.

4.8 Hydraulic Adjustments

⚠ WARNING

Prevent serious injury or death caused by unexpected movement:

- **Park machine on firm, level surface.**
- **Set parking brake**
- **Turn engine off.**
- **Place Do Not Operate tag on engine controls.**

1. Park skidsteer on a level surface.
2. Lower stump grinder to the ground.
3. Shut off engine and remove key.
4. Remove cover to access hydraulic valve.

(A) Flow Adjust - Adjusting the flow determines how much oil is sent to swing cylinders and rotor. The more oil that is sent to the rotor will result in swing cylinders moving slower. If more oil is sent to the cylinders, rotor speed may decrease when cylinders are activated. Typical adjustment is 5/8 turn out from closed position.

(B) Pressure Relief - 1/4 turn out from closed position is approximately 3000 psi (207 bar). Relief must be set lower than skidsteer relief.

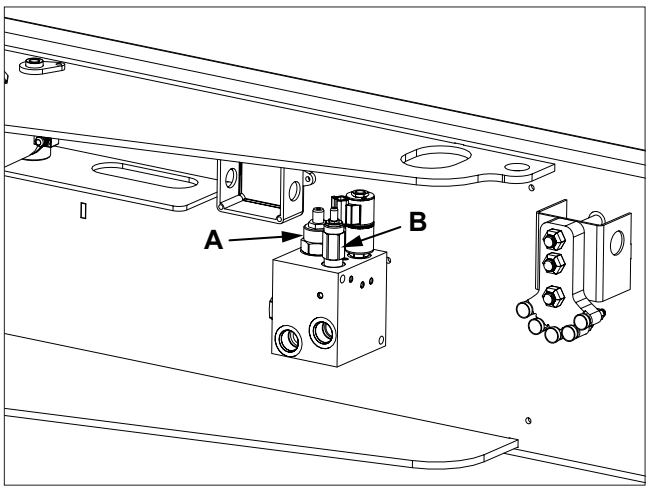

4.9 First Time User Tips

WARNING

Always turn off the skidsteer and disengage hydraulic flow before getting off the seat and approaching the rotor.

WARNING

Drilling, sawing, sanding or machining wood products can expose you to wood dust, a substance known to the State of California to cause cancer.

Avoid inhaling wood dust or use a dust mask or other safeguards for personal protection. For more information go to www.P65Warnings.ca.gov/wood.

WARNING

Wear an approved dust mask or respirator.

Follow local, state and federal regulations.

Stand to the side of the stump grinder and observe the center point on the bottom of the rotor. Now sit on the skidsteer seat and observe the center point again. This point will appear different depending on where you are positioned. This can be very deceiving! Familiarize yourself with the view of the stump grinder from the skidsteer seat.

Test all operating functions in an open area with the skidsteer at idle speed to get a feel for the controls. Take your time.

Start with a small stump. Make the first pass then disengage hydraulic flow and get off the skidsteer to see how much you have removed.

Get off the skidsteer after each pass to check the progress. The rotor is shielded from view when sitting on the skidsteer seat so it is difficult to accurately determine the progress. The ability to judge the positioning improves with practice. Do not expect to get the first stump done quickly.

4.10 Field Operation

WARNING

Prevent serious injury or death caused by unexpected movement:

- **Park machine on firm, level surface.**
- **Set parking brake**
- **Turn engine off.**
- **Place Do Not Operate tag on engine controls.**

WARNING

Never operate stump grinder when other people are in the vicinity. Debris can be thrown from cutting area. Keep all shields in place.

WARNING

Drilling, sawing, sanding or machining wood products can expose you to wood dust, a substance known to the State of California to cause cancer.

Avoid inhaling wood dust or use a dust mask or other safeguards for personal protection. For more information go to www.P65Warnings.ca.gov/wood.

WARNING

Wear an approved dust mask or respirator.

Follow local, state and federal regulations.

1. Attach stump grinder to skidsteer. See Attaching/Detaching in this section.
2. If stump is on a grade, position skidsteer in low area. This will position stump grinder in high area for a greater advantage of weight for stable cutting.
3. Move swing control switch (A) to move rotor across the stump.

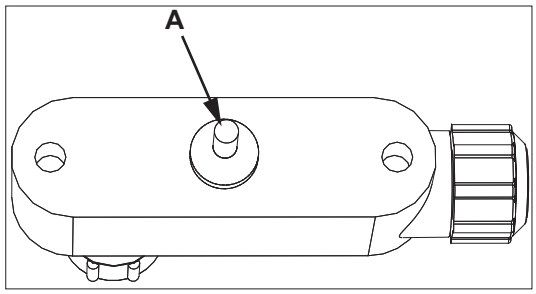

WARNING

Always turn off the skidsteer before getting off the seat and approaching the rotor.

4. Disengage skidsteer hydraulic flow. Shut off engine and remove key.
5. Get off the seat and check the position of the stump grinder to the stump. Verify the grinder is positioned at the edge of the stump that is farthest to the skidsteer.

WARNING

Raising the blast shield can allow debris to travel a long distance. Be aware of your surroundings.

Note: *If you are working close to a fence or building, the blast shield can be flipped up.*

6. Get back on the skidsteer and turn it on. Engage hydraulic flow.

7. Using the skidsteer lift and swing control to direct the stump grinder, make the first pass across the front edge of the stump, moving the rotor from in 3 - 6 inch passes. The size of the pass will depend on the hydraulic flow and hydraulic pressure of the skidsteer. Return the grinder to the far right after each pass.

8. Continue to take passes across the front edge of the stump (end away from skidsteer), taking 3 - 6 inches on each pass.

9. When ground level is reached, continue to grind 3 - 6 inches below the surface to the bottom of the stump where the roots branch out.

10. Lift the stump grinder and swing it to the far right. Back the skidsteer up slightly to position the stump grinder at the new front edge of the stump.

11. Make multiple passes over the front edge of the stump, taking 3 - 6 inches on each pass.

12. Reposition the skidsteer and stump grinder as needed until the entire stump has been removed to below ground level.

13. Follow the roots, taking as much of the larger surface roots as possible. If these are not removed they can, over time, protrude from the ground in areas where there is a heavy freeze/ thaw cycle.

14. Throttle down the skidsteer to an idle.

15. Disengage skidsteer hydraulic flow.

16. Shut off engine and remove key.

⚠ WARNING

Never approach stump grinder before rotor has come to a complete stop.

5 SERVICE AND MAINTENANCE

WARNING

Support grinder parking stand to prevent accidental lowering.

Never enter area under grinder.

Support rotor deflector guard, so shield does not accidentally fall.

WARNING

Pressurized fluids can penetrate the skin.

Hydraulic hoses can fail due to physical damage, age, kinks and exposure. Check hoses regularly. Replace damaged hoses.

Use body and face protection while searching for leaks. A tiny, almost invisible leak can penetrate the skin, thereby requiring immediate medical attention.

Use wood or cardboard to detect hydraulic leaks, never use your hands.

Prevent the hazard by relieving hydraulic pressure (See skidsteer Operator's Manual.) before connecting or disconnecting hydraulic lines. Verify all connections are tight before applying pressure.

Protect hands and body from high pressure fluids. If an accident occurs, see a doctor immediately. Any fluid injected into the skin must be surgically removed by a professional physician within a few hours or serious infection may result.

WARNING

Prevent serious injury or death caused by unexpected movement:

- **Park machine on firm, level surface.**
- **Set parking brake**
- **Turn engine off.**
- **Place Do Not Operate tag on engine controls.**

WARNING

Drilling, sawing, sanding or machining wood products can expose you to wood dust, a substance known to the State of California to cause cancer.

Avoid inhaling wood dust or use a dust mask or other safeguards for personal protection. For more information go to www.P65Warnings.ca.gov/wood.

WARNING

Wear an approved dust mask or respirator.

Follow local, state and federal regulations.

We design many of our products using industry-standard parts that are widely available from local supply stores.

Many replacement parts such as bearings, belts, seals, touch-up paint and cutting teeth can often be found through local suppliers, not just from Baumalight.

Service And Maintenance Chart		
General Inspection	Inspect the unit for any buildup of contamination (dirt, stones, etc.).	Daily
Hydraulics	Check hydraulic hoses and fittings for leaks.	Daily
Cutting Teeth	Check and rotate or replace one at a time as necessary.	Every 4 hours.
Blast Shield Pins	Lubricate pins so shield can move freely.	Every 6 hours.
Pivot Pins	Lubricate pivot pins.	Every 10 hours.
Rotor Retaining Bolts	Tighten to 130-140 lb-ft. (176-190 Nm) of torque.	Only if rotor is replaced.

5.1 Rotate Cutting Teeth

Each tooth can be rotated up to two times before replacement is necessary.

1. Park excavator and grinder on a level surface.
2. Lower parking stand to lowest setting and insert pin through hole and insert lock pin into pin.

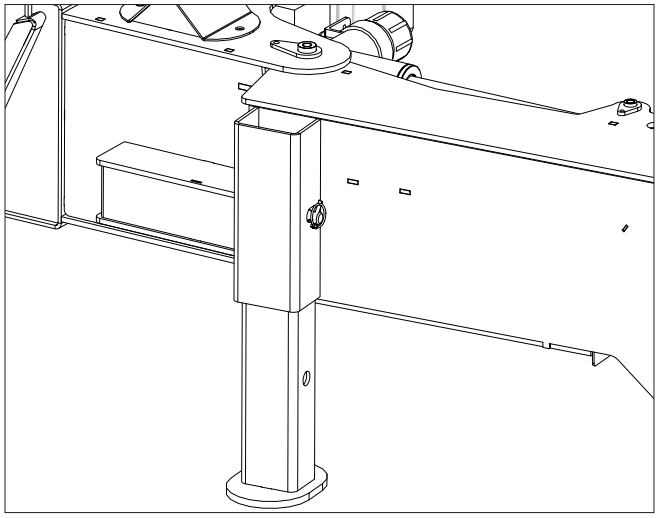

3. Lower stump grinder onto parking stand. Do not detach from skidsteer.
4. Shut off engine and remove key.
5. Inspect teeth for wear on top edge (A). Once top edge is worn, rotate tooth so a new edge is on top (cutting) edge.
6. Loosen locknut on tooth and rotate tooth 1/3 turn. Flat shoulder on tooth will fit against shoulder (B) on tooth holder.
7. Tighten locknut to torque listed below.

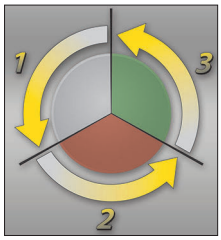

H3000 Teeth - 35 lb/ft (47 Nm)
G3000 Teeth - 35 lb/ft (47 Nm)
W3000 Teeth - 25 lb/ft (34 Nm)

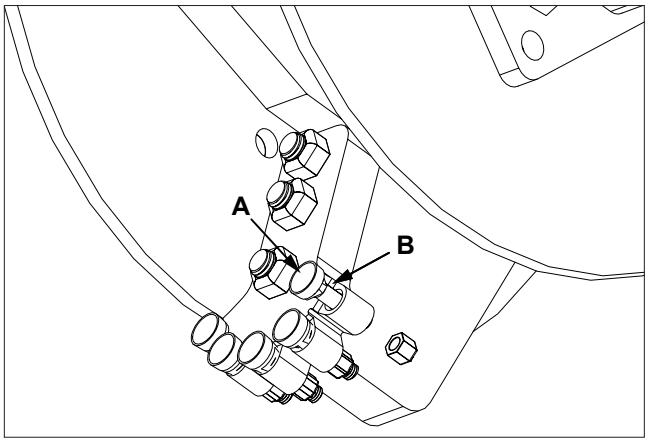

Note: *Parts breakdown can be found on Baumalight's website.* www.baumalight.com

5.2 Replace Cutting Teeth

1. Park skidsteer and grinder on a level surface.
2. Lower parking stand to lowest setting and insert pin through hole and insert lock pin into pin.
3. Lower stump grinder onto parking stand. Do not detach from skidsteer.
4. Shut off engine and remove key.
5. Inspect cutting teeth (A) for damage and wear. Replace individual teeth as needed.
6. Remove locknut, spacer and tooth. Install new tooth. Flat shoulder on tooth will fit against shoulder (B) on tooth holder.
7. Install spacer and locknut.
8. Tighten locknut to torque listed below.

H3000 Teeth - 35 lb/ft (47 Nm)
G3000 Teeth - 35 lb/ft (47 Nm)
W3000 Teeth - 25 lb/ft (34 Nm)

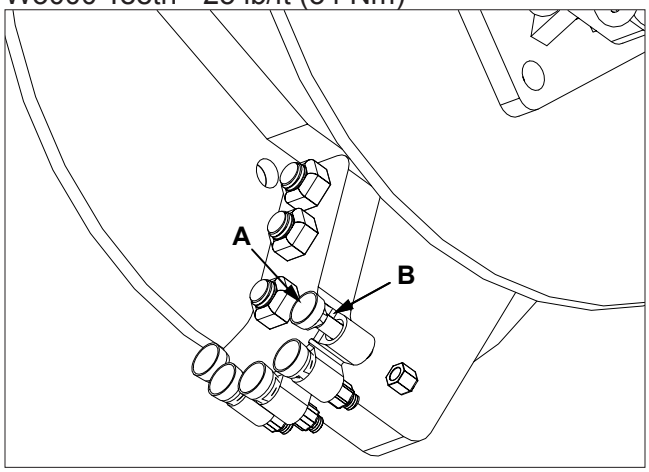

Note: *Parts breakdown can be found on Baumalight's website.* www.baumalight.com

5.3 Replace Hydraulic Hoses

1. Park skidsteer and grinder on a level surface.
2. Lower grinder to the ground.
3. Shut off engine and remove key.
4. Relieve hydraulic pressure. See your skidsteer Operator's Manual.
5. Disconnect hydraulic hoses from skidsteer.

⚠ CAUTION

Fall hazard.

Spilled fluids may be slippery. Clean up spilled fluid immediately.

6. Drain hydraulic hose at its lowest point. Drain oil into a suitable container. Clean up any spilled fluids immediately.
7. Remove hose from cylinder.
8. Remove quick coupler and/or adapter from hose.
9. Install replacement hose in reverse order of removal.

Note: *Parts breakdown can be found on Baumalight's website.* www.baumalight.com

5.4 Replace Rotor

1. Park skidsteer and grinder on a level surface.
2. Lower grinder to the ground.
3. Support grinder frame with safety stands.
4. Shut off engine and remove key.
5. Remove right side cover for access to rotor.
6. Remove six socket head screws (A).
7. Remove rotor (B).
8. Install rotor and tighten six socket head screws (A) to 130-140 lb-ft. (176-190 Nm) of torque.
9. Install tooth holder and cutting teeth on new rotor.
10. Install right side cover.

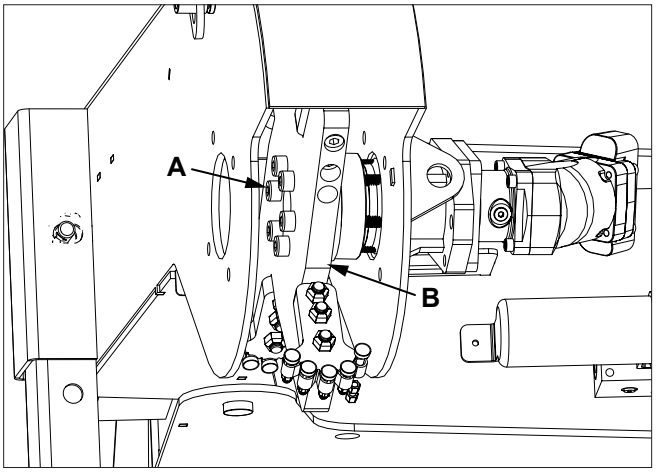

Note: *Parts breakdown can be found on Baumalight's website.* www.baumalight.com

5.5 Every 10 Hours

Lubricate pivot pins every 10 hours of use.

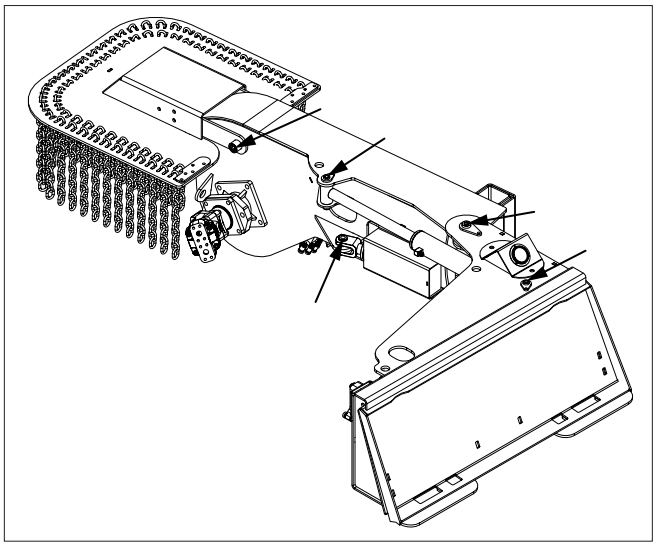

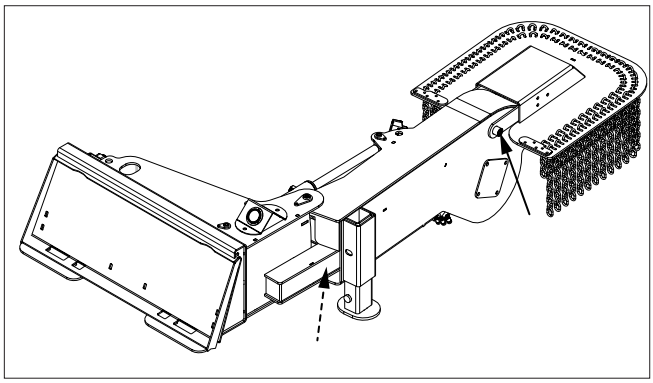

6 TROUBLESHOOTING

PROBLEM	CHECK	SOLUTION
Rotor does not spin.	Rotor jammed.	Remove material from rotor.
	Low oil.	Check oil level in skidsteer. Add if necessary.
	Not enough oil flow.	Check flow control on skidsteer. See your dealer.
Rotor does not have much power.	Low oil.	Check oil level in skidsteer. Add if necessary.
	Oil filter plugged.	Replace skidsteer oil filter.
	Relief valve not set properly.	Set relief valve. Pressure should be between 2,500 and 3,500 psi.
	Low oil flow and pressure.	Check flow control on skidsteer. See your dealer.
	Swing speed too fast.	Adjust flow control on valve to decrease swing speed/increase rotor speed.
Rotor does not have much power.	Low oil.	Check oil level in skidsteer. Add if necessary.
	Oil filter plugged.	Replace skidsteer oil filter.
	Not enough oil flow.	Check flow control on skidsteer. See your dealer.
	Check to see if rotor can be turn backward with hoses disconnected.	If rotor can be turned, anti-cavitation valve may be stuck open. Remove and clean anti-cavitation valve.
No movement on cylinders.	No oil flow.	Check for plugged or reversed hydraulic lines.
	Fuse blown on swing control.	Replace fuse.

7 STORAGE

7.1 Storing Grinder

1. Store stump grinder in a dry place.
2. Clean stump grinder thoroughly. Dirt and wood chips will draw moisture and cause rust.
3. Lubricate machine. (See Service and Maintenance section.)
4. Check condition of cutting teeth. Replace as necessary. (See Service and Maintenance section.)
5. Check for loose or missing hardware.
6. Paint parts as necessary.

7.2 Removing From Storage

1. Review Operator's manual and check adjustments.
2. Lubricate machine. (See Service and Maintenance section.)
3. If parts have been replaced, verify they run properly.

8 WARRANTY

To view the warranty, scan the QR Code below, or go to Baumalight.com. From the Support drop down, click on Support, then select Stump Grinders. Select Product Warranty.

For parts, specifications and the latest machine information please visit our website.

www.baumalight.com

MTB MFG INC.
CORPORATE HEADQUARTERS
4575 Powell Rd.,
Wallenstein, Ontario Canada
N0B 2S0
www.baumalight.com