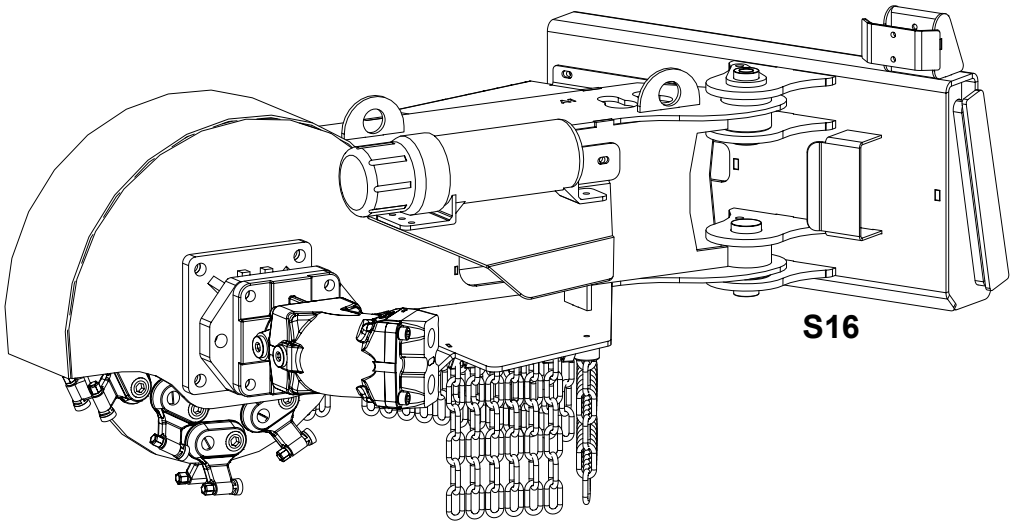

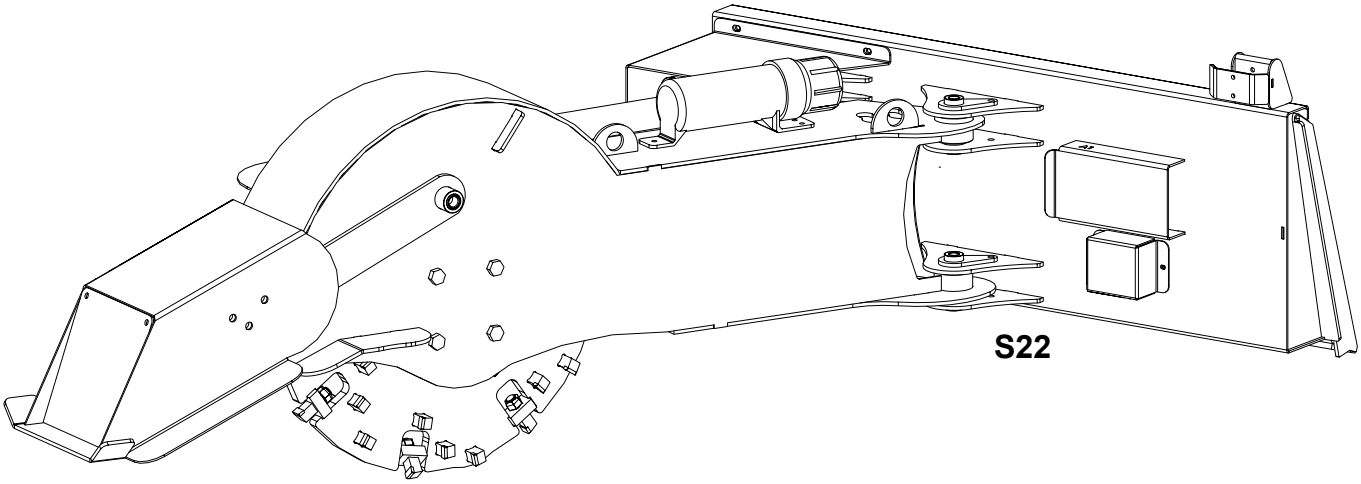

S16 And S22 Stump Grinder

OPERATOR'S MANUAL

Issue Date: October 2026

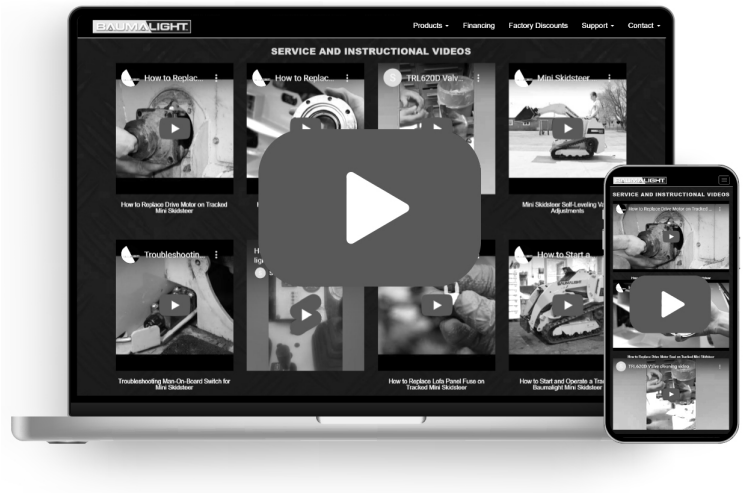

Service And Instructional Videos

Find online at baumalight.com/support

Following is a list of videos and documents available on Baumalights website and also on YouTube to help and enhance maintaining the stump grinder. The list below was current at the time this manual was issued. Additional content may be available.

Activity ID Number	Activity Name	Description	Item Available
318	Hydraulic Motor.	Breaking In Replacement Hydraulic Motor.	Video
373	Fuse On Power Source.	Why 30 Amp Fuse Is Required On Power Source.	Video
281	Skidsteer Case Drain Back-Pressure.	What May Cause Skidsteer Case Drain Back-Pressure.	Video
282	Skidsteer Case Drain Back-Pressure.	Testing Case Drain Back-Pressure With Pressure Gauge.	Video
283	Skidsteer Case Drain Back-Pressure.	Testing Case Drain Back-Pressure With Open Coupler.	Video
224	Replacing Teeth.	When To Replace H3000 Teeth.	Video
104	Remove Seal.	Remove Seal On Motor Or Load Adapter.	Video
123	Zero-Leak Relief Valve.	Demonstrating And Troubleshooting Zero-Leak.	Video
142	Replace Motor Shaft Seal.	Replace Shaft Seal On Piston Motor.	Video
389	Replacing Teeth.	When To Replace S1000 Teeth.	Video
477	Communicating Measurements.	Why Not To Send Pictures Of Measuring Tapes To Communicate Measurements.	Video
446	Actuator.	The Reason Why A Swing Actuator Is Broken.	Document

TABLE OF CONTENTS

1 INTRODUCTION 4
1.1 Overview 4
1.2 Intended Use And Foreseeable Misuse 4
2 SAFETY 5
2.1 Safety Alert Symbol And Safety Words 5
2.2 Operational Hazards 5
Prepare For Emergencies 6
Replace Safety Signs 6
Do Not Allow Riders 6
Lower Operating Speed 6
Avoid Rollover 7
Avoid Powerlines 7
Detach Stump Grinder Safely 7
Hazards From Modifying Equipment 7
2.3 Maintenance Hazards 9
3 SAFETY SIGNS 10
3.1 Safety Signs - S16 10
3.2 Safety Signs - S22 12
4 OPERATION 14
4.1 Preparation For Use 14
4.2 Hydraulic Connections 14
4.3 Pre-Operation Check List 15
4.4 Machine Components 15
4.5 Attaching Stump Grinder 15
4.6 Transporting 16
4.7 Detaching Stump Grinder 17
4.8 Carbide Teeth Break-In 17
4.9 First Time User Tips 17
4.10 Field Operation 18
5 SERVICE AND 21
MAINTENANCE 21
5.1 Rotate Cutting Teeth - S16 23
5.2 Replace Cutting Teeth - S16 24
5.3 Replace Tooth Holder - S16 24
5.4 Replace Cutting Teeth - S22 25
5.5 Replace Coupler Chain - S22 25
5.6 Replace Rotor - S16 26
5.7 Replace Rotor - S22 27
5.8 Replace Hydraulic Hoses 29
5.9 Lubrication 30
6 TROUBLESHOOTING 31
7 STORAGE 32
7.1 Storing Stump Grinder 32
7.2 Removing From Storage 32
8 WARRANTY 34

1 INTRODUCTION

1.1 Overview

Congratulations on your choice of a Baumalight Skidsteer Stump Grinder to complement your operation. This equipment has been designed and manufactured to meet the needs of a discriminating buyer for efficient grinding of stumps.

The S16 has 24 teeth on a 18 inch rotor. The S22 has 34 teeth on a 24 inch rotor. This means less cutting for each tooth resulting in longer tooth life and smoother cutting for less wear on the skidsteer. Heavy tooth population makes finer mulch and smoother operation.

The rotor is powered by the hydraulics on your skidsteer, with the swing cylinder activated by a 12V connection on the skidsteer.

Grease zerks and replaceable bushings are provided at major pivot points for extended service life.

The debris shields is standard equipment on all stump grinders. It is recommended that the stump grinder never be operated without one.

Safe, efficient and trouble free operation of your Stump Grinder requires that you and anyone else who will be operating or maintaining the Stump Grinder, read and understand the Safety, Operation, Maintenance and Troubleshooting information contained within the Operator's Manual.

This manual covers the S16 and S22 Baumalight Skidsteer Stump Grinder. Use the Table of Contents as a guide to locate required information.

Keep this manual handy for frequent reference and to pass on to new operators or owners. Contact your Baumalight dealer if you need assistance, information or additional copies of the manuals.

OPERATOR ORIENTATION - The directions left, right, front and rear, as mentioned throughout this manual, are as seen from the skidsteer driver's seat and facing in the direction of travel.

1.2 Intended Use And Foreseeable Misuse

The Stump Grinder is designed to be used on site to remove softwood and hardwood tree stumps by reducing the stumps to chips and dust.

The Stump Grinder is designed to be used by experienced operators, trained in the safe operation of a skidsteer and trained in the hazards related to using the stump grinder and the safe use of the grinder for the intended purpose. Operators will require personal protective equipment to reduce the risk from some hazards that cannot be completely eliminated or controlled by the design of the tool.

Care is required to ensure that the stump grinder will not come in contact with metallic objects, stones or other materials harder than a typical stump while grinding.

Stump grinders are not designed for use in hazardous atmospheres where there is a risk of fire or explosion due to flammable gases or vapors. Use in hazardous, explosive atmospheres is prohibited. Serious injury or death of the operator or bystanders may be caused if stump grinder is misused. Misuse may also cause damage to the skidsteer carrying the stump grinder.

2 SAFETY

2.1 Safety Alert Symbol And Safety Words

You must read, understand and follow the instructions given by the operating unit manufacturers, as well as the instructions in this manual.

The safety information in this manual is denoted by the safety alert symbol:

This symbol means ATTENTION! BECOME ALERT! YOUR SAFETY IS INVOLVED!

The level of risk is indicated by the following signal words:

DANGER

DANGER - Indicates a hazardous situation, which, if not avoided, WILL result in death or serious injury.

WARNING

WARNING - Indicates a hazardous situation, which, if not avoided, could result in death or serious injury.

CAUTION

CAUTION - Indicates a hazardous situation, which, if not avoided, could result in minor or moderate injury.

NOTICE

NOTICE - Indicates a situation that could result in damage to the equipment or other property.

2.2 Operational Hazards

WARNING

Prevent serious injury or death.

Read and understand this manual before operating the stump grinder.

Always stop engine and remove key before leaving operators seat.

Never allow anyone near the stump grinder during operation.

Travel at a safe speed.

WARNING

Prevent serious injury or death from moving parts.

Moving parts can crush and dismember.

Do not operate without guards and shields in place.

Disconnect and lockout power source before adjusting or servicing.

WARNING

Use stump grinder only for the designed applications.

Any other use may result in personal injury, damage to equipment and may void the warranty.

WARNING

Prevent serious injury or death.

Verify stump grinder is attached to skidsteer before operation or transport.

WARNING

Protect from flying debris.

Wear proper safety glasses, goggles, or a face shield to protect from flying debris.

Carefully read all safety messages in this manual and on equipment safety signs. Keep safety signs in good condition and replace missing or damaged safety signs.

New equipment components and repair parts must include the current safety decal.

Learn how to properly operate equipment. NEVER operate or work around this equipment without proper instruction, while fatigued or under the influence of alcohol, prescription or non-prescription medication or if feeling ill.

Keep your equipment in proper working condition.

Know the regulations and laws that apply to you and your industry.

This manual is not to replace any regulations or laws. Additional information may be found at: www.asae.org or www.osha.gov.

If you do not understand any part of this manual, contact your Baumalight dealer.

Prepare For Emergencies

- Be prepared in case of emergencies.
- Keep a fire extinguisher and first aid kit close to the machine.
- Keep emergency phone numbers close to your phone.
- Know your address so emergency services can locate you if an emergency arises.

Replace Safety Signs

- Replace missing or damaged safety signs.
- Safety signs are identified in Section 3 of this manual.
- Replacement safety signs are available from your Baumalight dealer.

Do Not Allow Riders

- NEVER lift or carry anyone with stump grinder.
- NEVER use stump grinder as a work platform.
- NEVER allow passengers on stump grinder.

Lower Operating Speed

- Lower operating speed while loading, unloading or performing heavy operations.
- Keep load low and move at slow speeds on rough or uneven terrain.

Avoid Rollover

The equipment may rollover, resulting in death or serious injury. To help prevent rollover:

- Travel at a slow speed.
- Avoid sharp turns & sudden movement on slopes.
- Carry loads close to the ground.
- Avoid holes, ditches and other obstructions which may cause equipment to rollover.
- Balance load so weight is evenly distributed and load is stable.
- Use caution when operating on slopes and do not operate on excessively steep slopes.
- Do not exceed load capacity of equipment.

Avoid Powerlines

⚠ DANGER

Prevent electrocution.

Death or serious injury can result if equipment or tree comes near or contacts power lines.

Electrocution can occur without direct contact.

- Check clearance before raising equipment.
- Have local utilities locate and mark buried wires, cables, pipelines and other hazards before grinding.

DO NOT leave the operator's seat if any part of the equipment contacts electric lines or cables.

Detach Stump Grinder Safely

Detach stump grinder on a firm and level surface. Stump grinder may fall over if detached on sloping or soft surface. Be sure people, livestock and pets are clear of machinery.

Relieve hydraulic pressure before disconnecting hydraulic hoses. See your skidsteer Operator's Manual.

Raised Attachment

⚠ WARNING

Crushing hazard.

Raised, unsupported stump grinder can fall, resulting in death or serious injury.

Never enter the area under a raised stump grinder unless properly supported.

A raised stump grinder can lower unexpectedly, resulting in death or serious injury.

NEVER enter area under a raised stump grinder unless stump grinder is properly and safely supported.

Lower stump grinder to ground, engage parking brake, shut off engine and remove key before servicing.

Hazards From Modifying Equipment

Do not make any alterations to your stump grinder Altering the equipment may cause unsafe conditions and may void the manufacturer's warranty.

WARNING

Pressurized fluids can penetrate the skin.

Hydraulic hoses can fail from age, damage and exposure.

Use body and face protection while searching for leaks. A tiny, almost invisible leak can penetrate the skin, thereby requiring immediate medical attention.

Use wood or cardboard to detect hydraulic leaks, never use your hands.

Escaping fluid under pressure can penetrate the skin causing serious injury.

Prevent the hazard by relieving pressure (See skidsteer Operator's Manual) before connecting or disconnecting hydraulic lines. Verify all connections are tight before applying pressure.

Search for leaks with a piece of cardboard or wood.

Protect hands and body from high pressure fluids. If an accident occurs, see a doctor immediately. Any fluid injected into the skin must be surgically removed within a few hours or serious infection may result.

Avoid Loud Noise

WARNING

Prolonged exposure to loud noise can cause impairment or loss of hearing.

Wear a suitable hearing protective device such as earmuffs or earplugs to protect against objectionable or uncomfortable loud noises.

Avoid Wood Dust Inhalation

WARNING

Drilling, sawing, sanding or machining wood products can expose you to wood dust, a substance known to the State of California to cause cancer.

Avoid inhaling wood dust or use a dust mask or other safeguards for personal protection. For more information go to www.P65Warnings.ca.gov/wood.

WARNING

Wear an approved dust mask or respirator.

Follow local, state and federal regulations.

2.3 Maintenance Hazards

Before servicing, park machine on a firm and level surface, remove key, set parking brake, chock wheels, and place a “Do Not Operate” tag on control panel. Read and understand this manual. If you do not understand any part of the manual, contact your Baumalight dealer.

Always wear face and/or eye protection, safety shoes, and other protective equipment appropriate for the job.

Do not make unauthorized modifications. Contact your Baumalight dealer before you weld, cut/drill holes, or make any other modifications.

WARNING

Moving parts can crush and cut.

Keep clear of moving components.

Follow lockout procedure before servicing.

WARNING

Burn hazard.

Hot and high pressure hydraulic oil.

Allow oil to cool before servicing.

WARNING

Entanglement hazard.

Keep clear of moving components.

Wear proper protective equipment appropriate for the job.

WARNING

Crushing hazard.

Before performing inspections, service or maintenance:

- **Park machine on firm, level surface.**
- **Engage parking brake.**
- **Turn engine off and remove key.**
- **Place “Do Not Operate” tag on control panel.**

WARNING

Drilling, sawing, sanding or machining wood products can expose you to wood dust, a substance known to the State of California to cause cancer.

Avoid inhaling wood dust or use a dust mask or other safeguards for personal protection. For more information go to www.P65Warnings.ca.gov/wood.

WARNING

Wear an approved dust mask or respirator.

Follow local, state and federal regulations.

3 SAFETY SIGNS

3.1 Safety Signs - S16

The two and four panel safety decals are pictorial and have a yellow background. The panel with a triangle indicates the potential hazard. The panel without a triangle indicates how to avoid the hazard.

If any of the decals are missing, are damaged, or if you do not understand the decal, please contact your dealer.

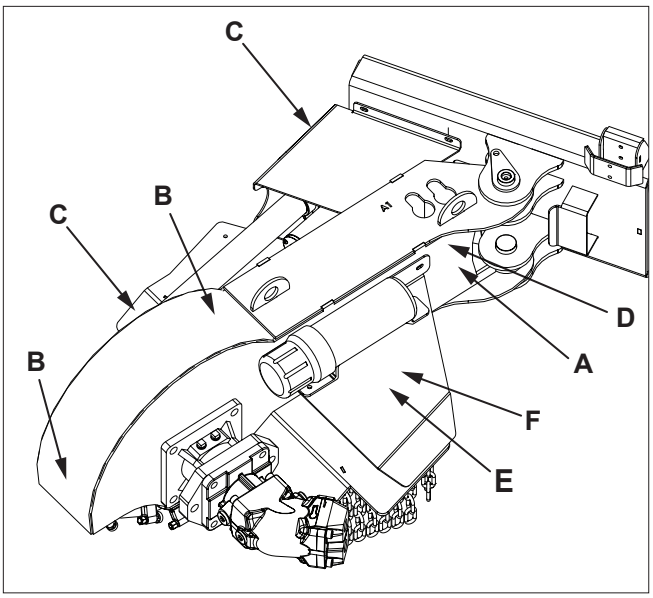

Dashes lines indicate items hidden from view unless cover is opened.

A. D005262 ⚠ WARNING - P65 warning information.

> ⚠ **WARNING:** This product can expose you to chemicals including 1,3-Butadiene and lead, which are known to the state of California to cause cancer and birth defects or other reproductive harm. For more information go to www.P65Warnings.ca.gov.
>
> D005262

B. D005223 ⚠ WARNING - Rotating blade hazard. Keep back 75m while machine is operating. Wait for blade to stop before approaching machine.

C. D005039 ⚠ WARNING - Pinch point / crush hazard. Do not reach into machine. Keep away from machine.

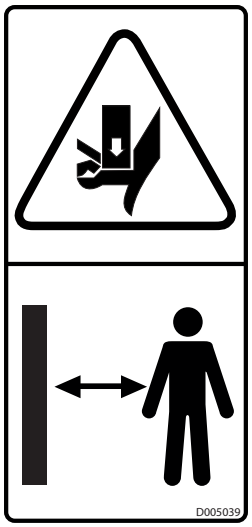

D. D005030 ⚠ WARNING - Pressurized fluid hazard. Keep away from machine.

E. D005522 ⚠ WARNING - Remove key before servicing.

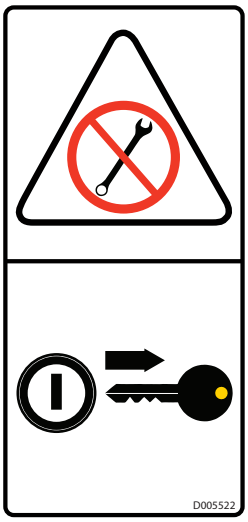

F. D005029 ⚠ WARNING - Read and understand safety signs on the machine and operating instructions in this manual before operating machine.

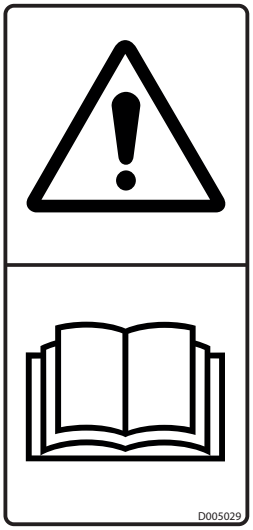

3.2 Safety Signs - S22

The two and four panel safety decals are pictorial and have a yellow background. The panel with a triangle indicates the potential hazard. The panel without a triangle indicates how to avoid the hazard.

If any of the decals are missing, are damaged, or if you do not understand the decal, please contact your dealer.

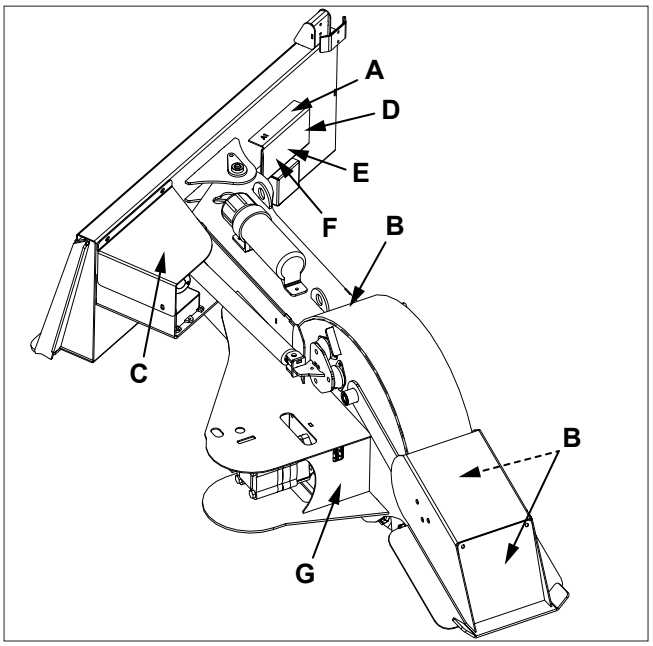

Dashes lines indicate items hidden from view unless cover is opened.

A. D005262 ⚠ WARNING - P65 warning information.

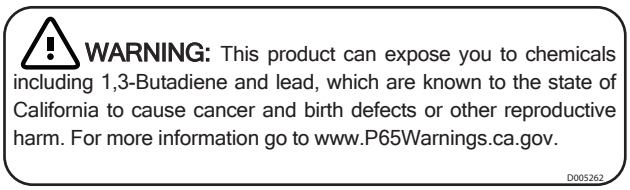

B. D005255 ⚠ WARNING - Rotating blade hazard. Keep back 75m while machine is operating. Wait for blade to stop before approaching machine.

C. D005127 ⚠ WARNING - Pinch point / crush hazard. Do not reach into machine. Keep away from machine.

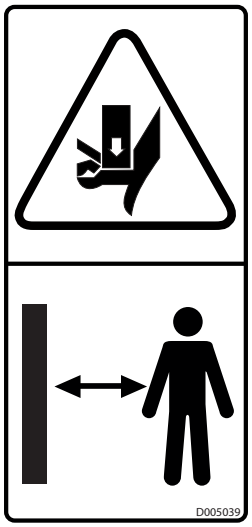

D. D005126 ⚠ WARNING - Pressurized fluid hazard. Keep away from machine.

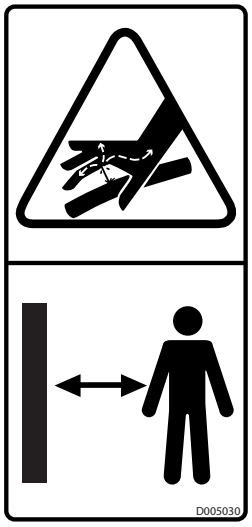

E. D005517 ⚠ WARNING - Remove key before servicing.

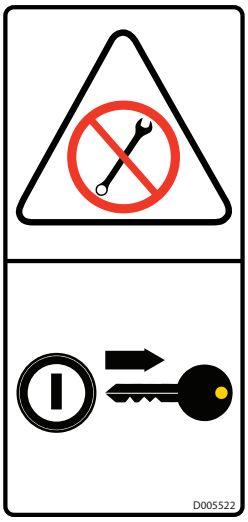

F. D005125 ⚠ WARNING - Read and understand safety signs on the machine and operating instructions in this manual before operating machine.

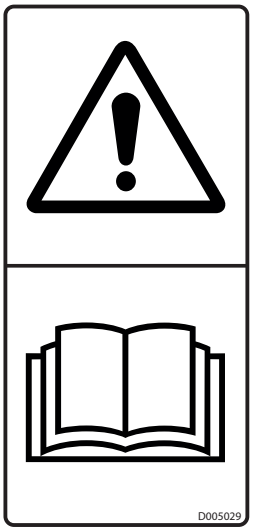

G. D005130 ⚠ WARNING - Read and understand safety signs on the machine and operating instructions in this manual before operating machine.

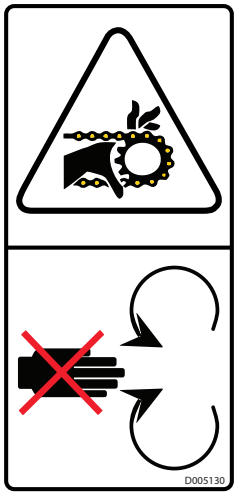

4 OPERATION

4.1 Preparation For Use

⚠ WARNING

Drilling, sawing, sanding or machining wood products can expose you to wood dust, a substance known to the State of California to cause cancer.

Avoid inhaling wood dust or use a dust mask or other safeguards for personal protection. For more information go to www.P65Warnings.ca.gov/wood.

⚠ WARNING

Wear an approved dust mask or respirator.

Follow local, state and federal regulations.

Although the Stump Grinder has been carefully inspected and checked prior to shipment from manufacturer, it is recommended that the unit be thoroughly inspected.

Check all bolts for tightness and remove all shipping tags, bags, skids, and blocking. Check swing frame to ensure that it is free from obstruction and can operate smoothly without binding.

Remove any masking materials affixed during painting. Inspect the skidsteer and any accessory equipment to verify that nameplates and all safety warning, caution signs and decals provided with the equipment are in place and clearly visible.

Review all skidsteer pre-start instructions, and verify that all recommended steps and procedures have been followed. Never bar over the rotor, This could cause damage and result in personal injury or equipment damage.

Note: *Always keep the weight of the machine in mind. Never position body in line of impact.*

The 12V power source must be equipped with a 30 amp fuse for constant power to the electric swing actuator. If your skidsteer does not have a 30-amp fuse, we suggest running a separate heavy gauge wire directly to the battery. Fuses rated below 30 amps will fail during normal operation. The slip clutch in the electric swing actuator is set to draw up to 30 amps before it actuates. This is just for the constant power, the directional signal wires can be fused at a lower amperage.

4.2 Hydraulic Connections

⚠ WARNING

Pressurized fluids can penetrate the skin.

Disconnect and lock out power source before disconnecting and/or connecting hydraulic hoses.

You must connect the pressure, return and case drain (if equipped) hoses from stump grinder to skidsteer hydraulic couplers.

The stump grinder is not equipped with hydraulic couplers. Install couplers and connect your skidsteer pressure, return and case drain (if equipped) hoses to the stump grinder hoses. Install your couplers to the hoses listed in the table below.

Fitting Size	Hose Description	Qty.
3/4 JIC FM	Pressure & Return	2
3/8 JIC FM	Case Drain	1

Identify the pressure port hose and connect your hoses to the cutter hoses.

4.3 Pre-Operation Check List

Check-mark	Check these items:	Frequency
	Verify the quick attach handles are locked.	Each operation.
	Check the hydraulic fluid level to verify there is sufficient fluid in the system.	Each operation.
	Check hydraulic lines for breaks and punctures.	Each operation.
	Verify hydraulic lines are plugged in securely.	Each operation.
	Verify hydraulic lines are tied well away and cannot bind or be pinched.	Each operation.
	Check the cross bolts that secure the pivot pins.	Each operation.
	Check swing control function.	Each operation.
	Verify the cutting teeth on the rotor are tight.	Every 4 hours.
	Grease pivot pins.	Every 10 hours.

4.4 Machine Components

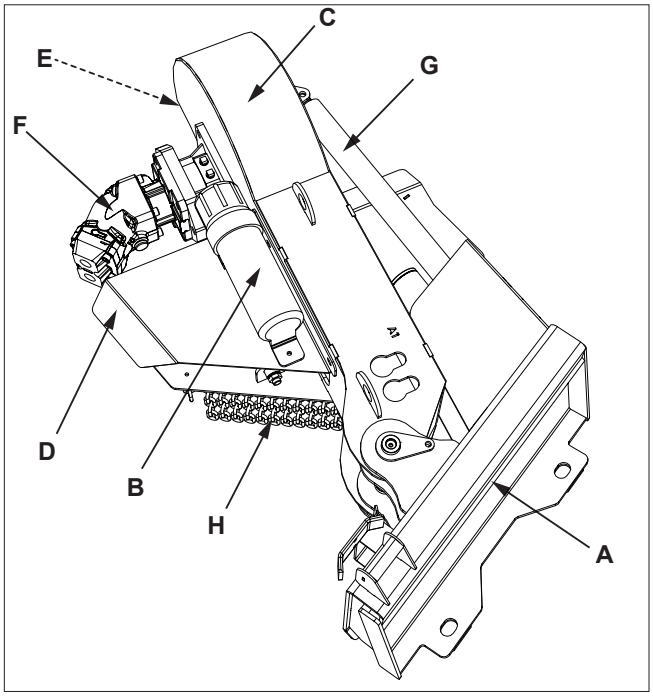

A. Quick Attach
B. Manual Storage Tube
C. Rotor Shield
D. Debris Shield
E. Rotor
F. Hydraulic Motor
G. Swing Cylinder
H. Blast Shield

4.5 Attaching Stump Grinder

WARNING

Prevent injury.

Never position yourself between skidsteer and stump grinder.

Only experienced and properly trained operator's should operate the skidsteer and stump grinder.

1. Read all instructions.
2. Check for loose teeth or any other loose parts
3. Verify hydraulic lines are clear of pinch areas.
4. Verify there is sufficient visibility and maneuverability to move up to the stump grinder.
5. Verify pins are secure in the correct position.
6. Attach skidsteer to stump grinder. See skidsteer Operator's Manual.
7. Connect pressure, return and case drain (if equipped) hydraulic hoses to the skidsteer couplers. See skidsteer Operator's Manual. Verify hydraulic hoses are clear of pinch areas.
8. Connect swing control electrical harness.
9. Move to a clear open area to test functions.

⚠ WARNING

Pressurized fluids can penetrate the skin.

Hydraulic hoses can fail due to physical damage, age, kinks and exposure. Check hoses regularly. Replace damaged hoses.

Use body and face protection while searching for leaks. A tiny, almost invisible leak can penetrate the skin, thereby requiring immediate medical attention.

Use wood or cardboard to detect hydraulic leaks, never use your hands.

4.6 Transporting

⚠ WARNING

To prevent bodily injury from rotating rotor, be sure to disengage power before transporting grinder.

NOTICE

Prevent equipment damage.

Swing cylinder may be damaged if stump grinder is forcefully driven into stumps, large rocks or hard ground while repositioning.

1. Verify all reflectors and Slow Moving Vehicle (SMV) sign are visible.
2. Raise stump grinder to transport position.
3. Center the grinder directly in front of the skidsteer for greater stability.
4. Verify grinder power is disengaged.
5. Travel at a reasonable and safe speed.

4.7 Detaching Stump Grinder

WARNING

Prevent serious injury or death caused by unexpected movement:

1. **Park skidsteer on a level surface.**
2. **Engage skidsteer park brake.**
3. **Disengage hydraulic flow.**
4. **Shut off engine and remove key.**

1. Park skidsteer on a level surface.
2. Lower grinder to the ground.
3. Shut off engine and remove key.
4. Relieve hydraulic pressure. See your skidsteer Operator's Manual.
5. Disconnect hydraulic hoses.
6. Disconnect swing control electrical harness.
7. Disconnect skidsteer from stump grinder. See skidsteer Operator's Manual.

4.8 Carbide Teeth Break-In

During the first few hours of use, avoid hitting stones as much as possible to allow the carbide teeth to wear slightly. This can be done by keeping the rotor above ground level.

New carbide tips are razor sharp and can chip and shatter easily when they hit hard objects. Once the razor sharpness has worn away, the tips do not chip as easily. Observing these precautions will extend the life of the carbide teeth and reduce operating expenses.

4.9 First Time User Tips

WARNING

Always turn off the skidsteer and disengage hydraulic flow before getting off the seat and approaching the rotor.

WARNING

Drilling, sawing, sanding or machining wood products can expose you to wood dust, a substance known to the State of California to cause cancer.

Avoid inhaling wood dust or use a dust mask or other safeguards for personal protection. For more information go to www.P65Warnings.ca.gov/wood.

WARNING

Wear an approved dust mask or respirator.

Follow local, state and federal regulations.

Before you begin, make sure the skidsteer is turned off and hydraulic flow is disengaged.

Stand to the side of the stump grinder and observe the center point on the bottom of the rotor. Now sit on the skidsteer seat and observe the center point again. This point will appear different depending on where you are positioned. This can be very deceiving! Familiarize yourself with the view of the stump grinder from the skidsteer seat.

Test all operating functions in an open area with the skidsteer at idle speed to get a feel for the controls. Take your time.

Reference the cutting chart on baumalight.com to get an approximate time to grind stumps.

Start with a small stump. Make the first pass then disengage hydraulic flow and get off the skidsteer to see how much you have removed.

Get off the skidsteer after each pass to check the progress. The rotor is shielded from view when sitting on the skidsteer seat so it is difficult to accurately determine the progress. The ability to judge the positioning improves with practice. Do not expect to get the first stump done quickly.

4.10 Field Operation

WARNING

Prevent serious injury or death caused by unexpected movement:

1. **Park skidsteer on a level surface.**
2. **Engage skidsteer park brake.**
3. **Disengage hydraulic flow.**
4. **Shut off engine and remove key.**

WARNING

Never operate skidsteer when other people are in the vicinity.

Do not allow riders on skidsteer.

WARNING

Never operate stump grinder when other people are in the vicinity. Debris can be thrown several feet from cutting area. Keep all shields in place.

WARNING

Drilling, sawing, sanding or machining wood products can expose you to wood dust, a substance known to the State of California to cause cancer.

Avoid inhaling wood dust or use a dust mask or other safeguards for personal protection. For more information go to www.P65Warnings.ca.gov/wood.

⚠ WARNING

Wear an approved dust mask or respirator.

Follow local, state and federal regulations.

1. Attach stump grinder to skidsteer. See Attaching/Detaching in this section.
2. If stump is on a grade, position skidsteer in low area. This will position stump grinder in high area for a greater advantage of weight for stable cutting.
3. Move over stump so rotor torques downward pushing frame up to avoid binding.
4. Engage rotor and slowly lower it in a controlled manor to desired cutting depth. Always lower rotor beside stump, never try cutting down, always cut from the side.

NOTICE

Prevent equipment damage.

Use swing cylinder to move rotor into stump.

Swing cylinder damage may result if skidsteer is pivoted to grind stump.

Swing cylinder can not withstand the force generated by the skidsteer.

5. Move swing cylinder control switch (A) to move rotor into the stump. **DO NOT PIVOT SKIDSTEER**! Swing control is protected by a 30 amp fuse. Use 30 amp fuse only. Anything smaller will blow in normal operation.

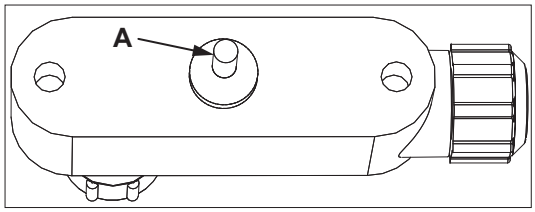

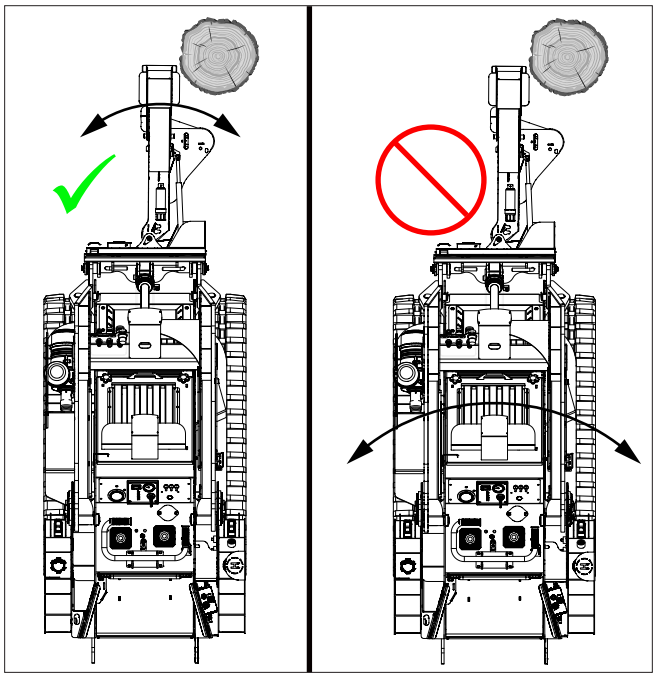

6. If rotor stalls, stop motion and retract swing cylinder slightly. Swing cylinder is equipped with a slip clutch to prevent excessive force into the stump.
7. After a complete pass, move swing control switch to retract sweep and lower rotor to desired position for next pass.

Continue the passes in this manor until stump is completely removed.

WARNING

Always turn off the skidsteer before getting off the seat and approaching the rotor.

8. Disengage skidsteer hydraulic flow. Shut off engine and remove key.

9. Get off the seat and check the position of the stump grinder to the stump. Verify the grinder is positioned at the edge of the stump that is closest to the skidsteer.

WARNING

Raising the deflector guard can allow debris to travel a long distance. Be aware of your surroundings.

10. Get back on the skidsteer and turn it on. Engage hydraulic flow.

11. Using the skidsteer lift and swing control to direct the stump grinder across the front edge of the stump, moving the rotor from right to left in 3-6 in. (76-152 mm) passes. The size of the pass will depend on the hydraulic flow and hydraulic pressure of the skidsteer. Return the grinder to the far right after each pass.

12. Continue to take passes across the front edge of the stump (end away from skidsteer), taking 3-6 in. (76-152 mm) on each pass.

13. When ground level is reached, continue to grind 3-6 in. (76-152 mm) below the surface to the bottom of the stump where the roots branch out.

14. Lift the stump grinder and swing it to the far right. Back the skidsteer up slightly to position the stump grinder beside the new front edge of the stump.

15. Make multiple passes over the front edge of the stump, taking 2 in. (51 mm) on each pass.

16. Reposition the skidsteer and stump grinder as needed until the entire stump has been removed to below ground level.

17. Follow the roots, taking as much of the larger surface roots as possible. If these are not removed they can, over time, protrude from the ground in areas where there is a heavy freeze/thaw cycle.

18. Throttle down the skidsteer to an idle.

19. Disengage skidsteer hydraulic flow.

20. Shut off engine and remove key.

WARNING

Never approach stump grinder before rotor has come to a complete stop.

5 SERVICE AND MAINTENANCE

Service And Maintenance Chart		
General Inspection	Inspect the unit for any buildup of contamination (dirt, stones, etc.).	Daily
Hydraulics	Check hydraulic hoses and fittings for leaks.	Daily
Cutting Teeth	Check and replace one at a time as necessary. The teeth on the outer edge of the wheel wear faster and are more prone to chipping. With daily use, expect to replace 5 to 10 teeth per week (See Replace Cutting Teeth in this section.)	Every 4 hours.
Pivot Pins	Lubricate pivot pins.	Every 10 hours.
Rotor Bearings	Lubricate	See Chart in Section 5.9

⚠ DANGER

Support grinder frame with safety stands to prevent accidental lowering. Do not position stands under rotor because it can rotate.

Never enter area under grinder.

Support rotor deflector guard, so shield does not accidentally fall.

⚠ WARNING

Pressurized fluids can penetrate the skin.

Hydraulic hoses can fail due to physical damage, age, kinks and exposure. Check hoses regularly. Replace damaged hoses.

Use body and face protection while searching for leaks. A tiny, almost invisible leak can penetrate the skin, thereby requiring immediate medical attention.

Use wood or cardboard to detect hydraulic leaks, never use your hands.

Prevent the hazard by relieving pressure (See skidsteer Operator's Manual.) before connecting or disconnecting hydraulic lines. Verify all connections are tight before applying pressure.

Protect hands and body from high pressure fluids.

If an accident occurs, see a doctor immediately. Any fluid injected into the skin must be surgically removed by a professional physician within a few hours or serious infection may result.

⚠ WARNING

Prevent serious injury or death caused by unexpected movement:

1. **Park skidsteer on a level surface.**
2. **Engage skidsteer park brake.**
3. **Disengage hydraulic flow.**
4. **Shut off engine and remove key.**

⚠ WARNING

Drilling, sawing, sanding or machining wood products can expose you to wood dust, a substance known to the State of California to cause cancer.

Avoid inhaling wood dust or use a dust mask or other safeguards for personal protection. For more information go to www.P65Warnings.ca.gov/wood.

⚠ WARNING

Wear an approved dust mask or respirator.

Follow local, state and federal regulations.

We design many of our products using industry-standard parts that are widely available from local supply stores.

Many replacement parts such as bearings, belts, seals, touch-up paint and cutting teeth can often be found through local suppliers, not just from Baumalight.

5.1 Rotate Cutting Teeth - S16

Check cutting teeth every 4 hours of use. Keep cutting teeth in good condition. Unit will cut faster and remaining teeth will last longer if broken or worn teeth are replaced.

Each tooth can be rotated up to two times before replacement is necessary.

1. Park skidsteer and stump grinder on a level surface.
2. Shut off engine.
3. Inspect teeth for wear on top edge (A). Once top edge is worn, rotate tooth so a new edge is on top (cutting) edge.
4. Loosen locknut on tooth and rotate tooth 1/3 turn. Flat shoulder (B) on tooth will fit against shoulder (C) on tooth holder.
5. Tighten locknut (A) to torque listed below.

H3000 Teeth - 35 lb/ft (47 Nm)
G3000 Teeth - 35 lb/ft (47 Nm)
W3000 Teeth - 25 lb/ft (34 Nm)

Note: *Parts breakdown can be found on Baumalight's website.* **www.baumalight.com**

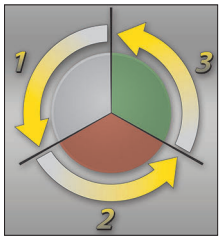

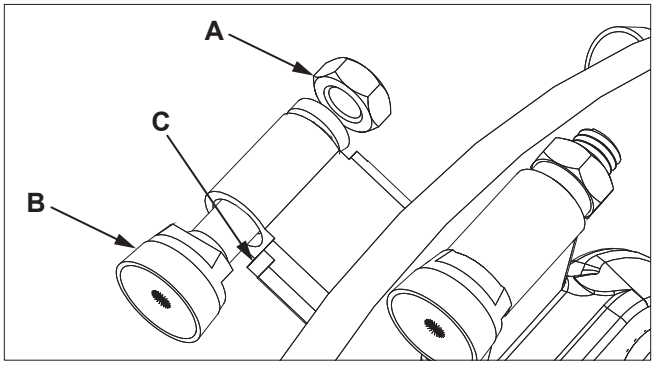

5.2 Replace Cutting Teeth - S16

1. Park skidsteer and stump grinder on a level surface.
2. Lower grinder to the ground.
3. Shut off engine and remove key.
4. Inspect cutting teeth (B) for damage and wear. Replace individual teeth as needed.
5. Remove locknut (A) and spacer from tooth (B). Install new tooth. Flat shoulder on tooth will fit against shoulder (C) on tooth holder.
6. Install spacer and locknut.
7. Tighten locknut (A) to torque listed below.

H3000 Teeth - 35 lb/ft (47 Nm)
G3000 Teeth - 35 lb/ft (47 Nm)
W3000 Teeth - 25 lb/ft (34 Nm)

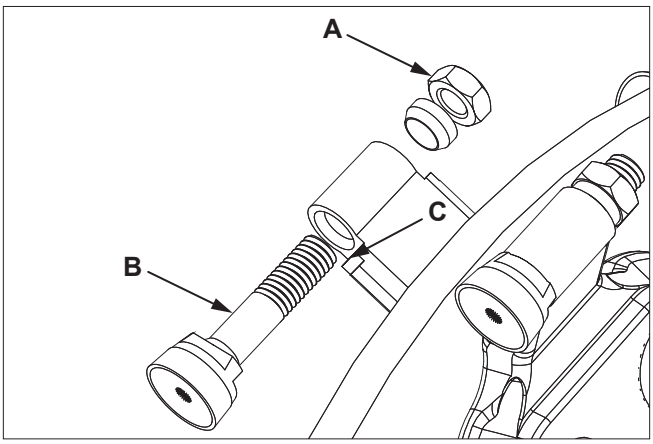

Note: *Parts breakdown can be found on Baumalight's website.* **www.baumalight.com**

5.3 Replace Tooth Holder - S16

1. Park skidsteer and stump grinder on a level surface.
2. Shut off engine.
3. Inspect tooth holders (A) for damage and wear. Replace individual tooth holders as needed.
4. Remove tooth from tooth holder.
5. Remove mounting hardware on tooth holders. Install new tooth holder and tighten mounting hardware.
6. Install tooth into new tooth holder.
7. Tighten tooth locknut to torque listed below.

H3000 Teeth - 35 lb/ft (47 Nm)
G3000 Teeth - 35 lb/ft (47 Nm)
W3000 Teeth - 25 lb/ft (34 Nm)

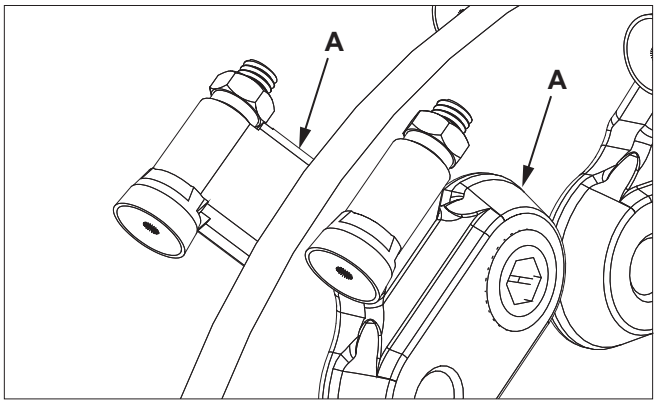

Note: *Parts breakdown can be found on Baumalight's website.* **www.baumalight.com**

5.4 Replace Cutting Teeth - S22

1. Park skidsteer and stump grinder on a level surface.
2. Lower grinder to the ground.
3. Shut off engine and remove key.
4. Inspect cutting teeth (B) for damage and wear. Replace individual teeth as needed.
5. Note orientation of tooth before removal.
6. Remove lock nut (A) and cutting tooth (B).
7. Install replacement tooth and lock nut. Tighten lock nut (A) to 150 lb/ft (204 Nm) of torque.

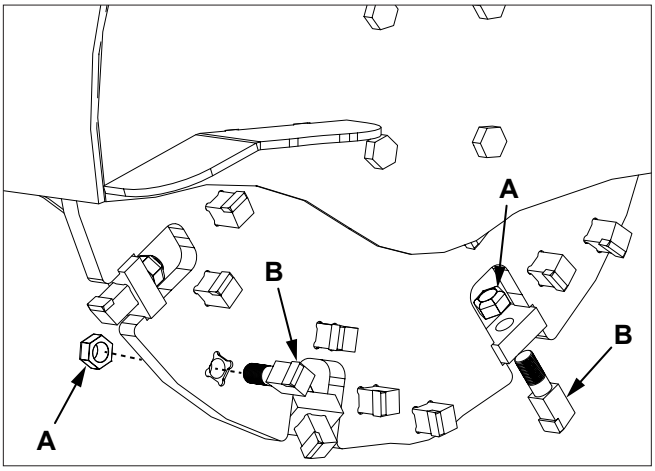

Note: *Parts breakdown can be found on Baumalight's website.* **www.baumalight.com**

5.5 Replace Coupler Chain - S22

1. Park skidsteer and grinder on a level surface.
2. Lower grinder to the ground.
3. Shut off engine and remove key.
4. Remove master link from coupler chain (A).
5. Remove coupler chain (A).

Note: Coupler hub on rotor shaft and motor shaft do not have setscrews. Setscrews are not needed in this application.

6. Install coupler chain (A) and chain master link.

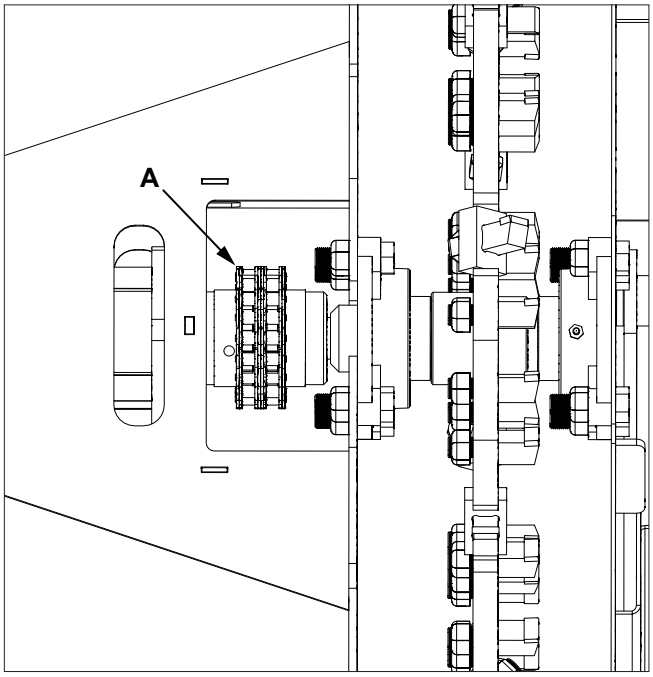

Note: *Parts breakdown can be found on Baumalight's website.* **www.baumalight.com**

5.6 Replace Rotor - S16

1. Park skidsteer and grinder on a level surface.
2. Lower grinder to the ground.
3. Support grinder frame with safety stands.
4. Shut off engine and remove key.
5. Remove tooth holders (D) with teeth.
6. Remove six socket head screws (A).
7. Remove hub (B).
8. Remove rotor (C).
9. Install rotor and tighten six socket head screws to 130-140 lb-ft. (176-190 Nm) of torque.

Note: *Parts breakdown can be found on Baumalight's website.* **www.baumalight.com**

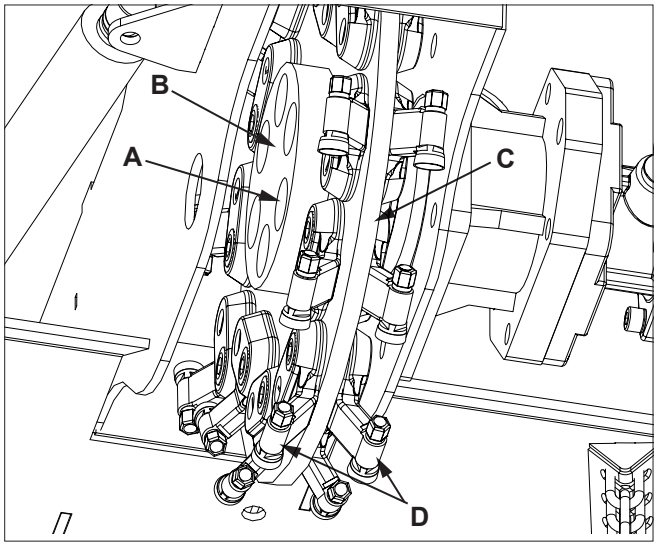

10. Install tooth holder (D) and cutting teeth on new rotor.
11. Tighten tooth locknut to torque listed below.

H3000 Teeth - 35 lb/ft (47 Nm)
G3000 Teeth - 35 lb/ft (47 Nm)
W3000 Teeth - 25 lb/ft (34 Nm)

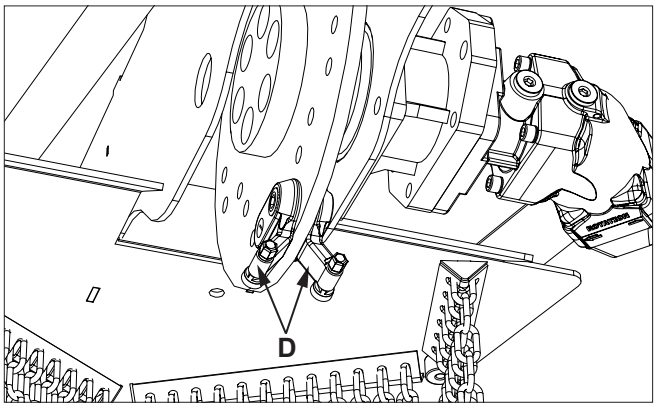

5.7 Replace Rotor - S22

1. Park skidsteer and grinder on a level surface.
2. Lower grinder to the ground.
3. Shut off engine and remove key.
4. Remove motor and mounting plate mounting hardware.
5. Remove motor (A), mounting plate (B), coupler (C), chain (D), coupler (E) and shaft keys.

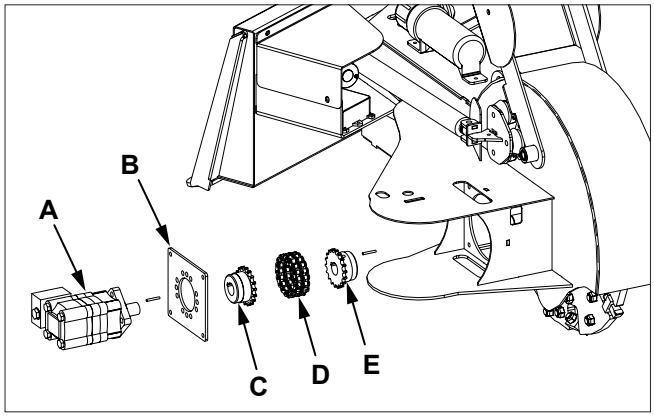

6. Remove four rotor bearing mounting bolts (F).

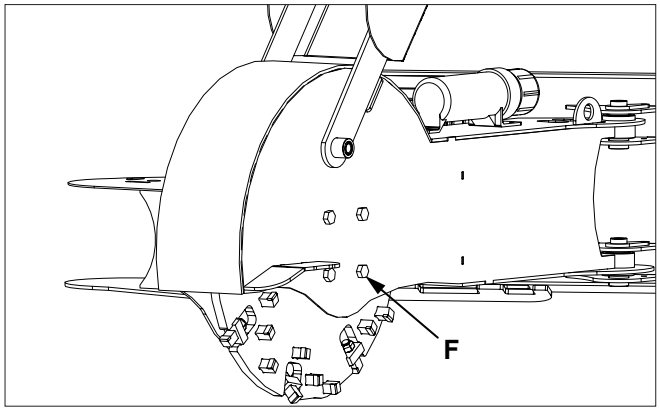

7. Remove four front rotor bearing mounting bolts (G).

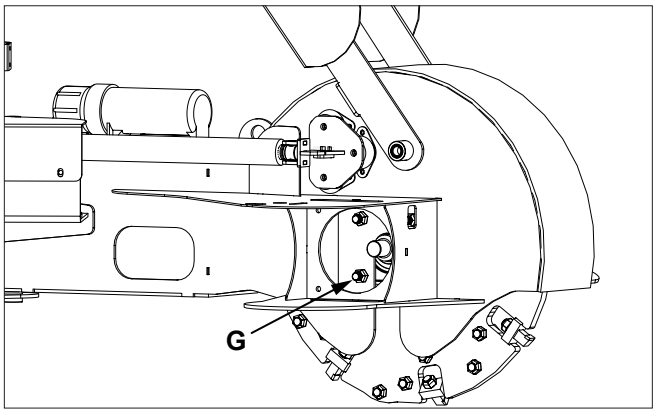

WARNING

Prevent injury.

Rotor weighs approximately 110 lbs (50 kg). Plan a safe rotor handling procedure.

8. Support rotor to prevent rotor from falling and carefully raise stump grinder housing.

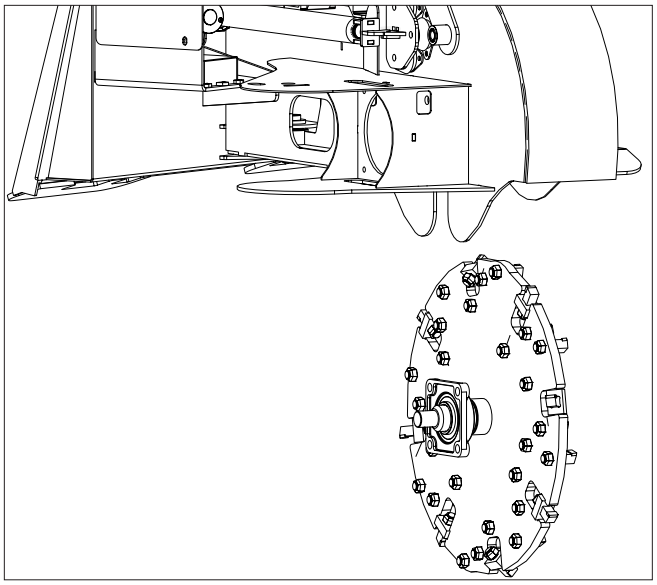

9. Remove bearings (H).

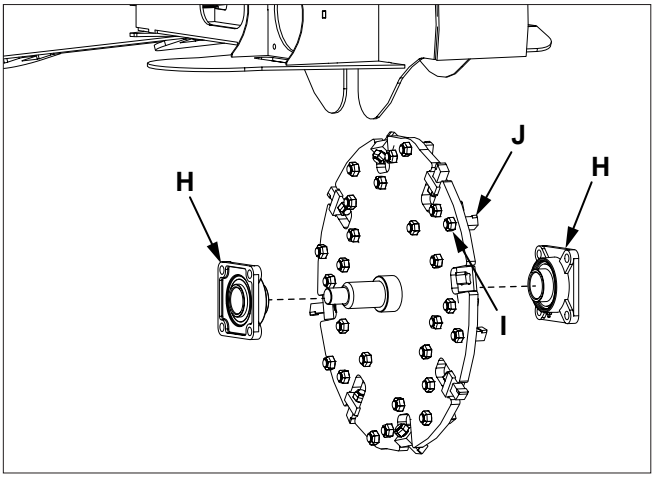

10. Note orientation of cutting teeth. Remove locknut (I) and tooth (J). Repeat for each tooth.

11. Clean and inspect all parts.

12. Install tooth (J) and locknut (I). Tighten locknut (I) to 150 lb-ft (204 Nm) of torque. Repeat for each tooth.

13. Install bearings (H) with mounting flange facing away from rotor.

⚠ WARNING

Prevent injury.

Rotor weighs approximately 110 lbs (50 kg). Plan a safe rotor handling procedure.

14. Support rotor to prevent rotor from falling and carefully lower stump grinder housing over rotor.

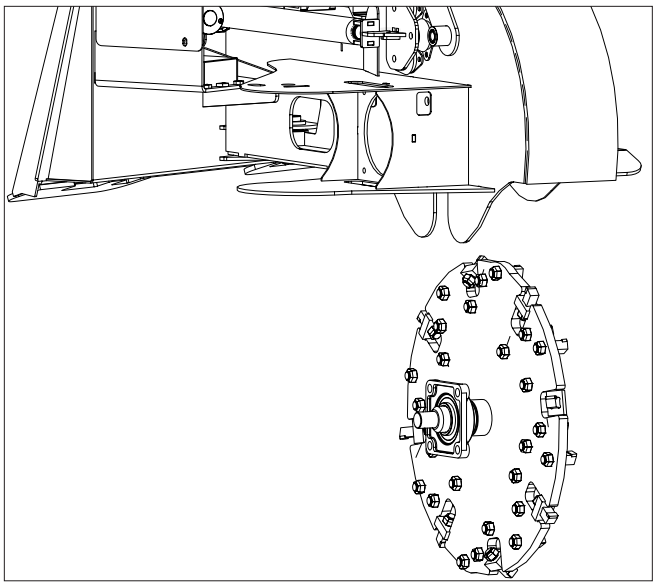

15. Install front bearing mounting bolts (G) and rear bearing mounting bolts (F). Tights bolts securely.

Note: *Couplers (C) and (E) do not have setscrews. Setscrews are not needed in this application.*

16. Install shaft keys, coupler (E), chain (D), coupler (C), mounting plate (B) and motor (A).

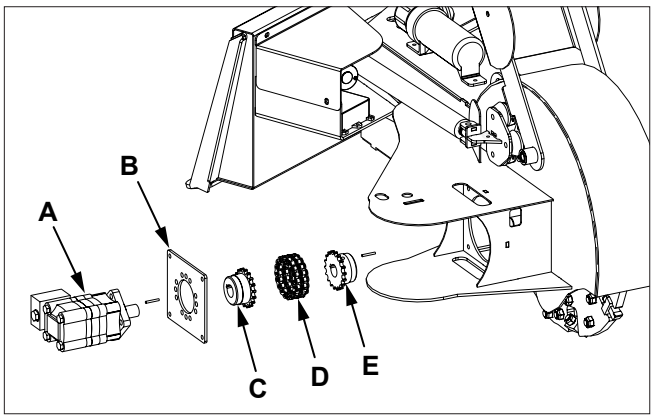

17. Install motor and mounting plate mounting hardware and tighten securely.

5.8 Replace Hydraulic Hoses

1. Park skidsteer and grinder on a level surface.
2. Lower grinder to the ground.
3. Shut off engine and remove key.
4. Relieve hydraulic pressure. See your skidsteer Operator's Manual.
5. Disconnect hydraulic hoses from skidsteer.

⚠ CAUTION

Fall hazard.

Spilled fluids may be slippery. Clean up spilled fluid immediately.

6. Drain hydraulic hose at its lowest point. Drain oil into a suitable container. Clean any spilled fluids immediately.
7. Remove hose from cylinder.
8. Remove quick coupler and/or adapter from hose.
9. Install replacement hose in reverse order of removal.

Note: *Parts breakdown can be found on Baumalight's website.* **www.baumalight.com**

5.9 Lubrication

Lubricate pivot pins (A) and rotor shield (B) (S22 only) every 10 hours of use.

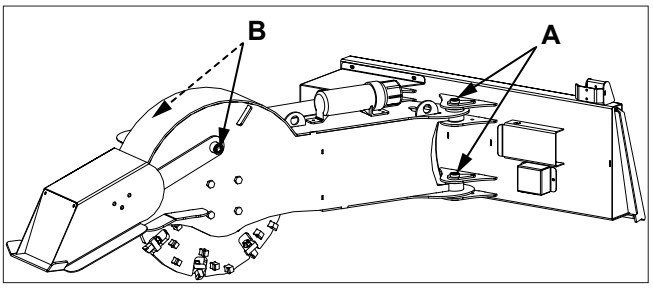

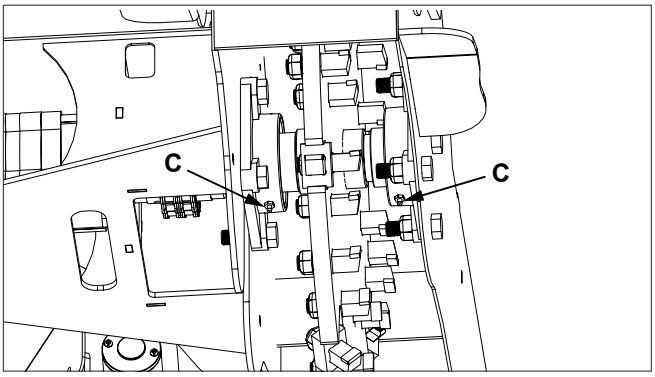

The rotor bearings (C) are factory lubricated with a lithium or lithium complex base grease which is suitable for most applications. Select a grease that is compatible with a lithium or lithium complex grease.

The bearings should contain as much grease as speed will permit. A full bearing with consequent slight leakage through the seal is the best protection against contaminant entry.

Extreme situations may require a change in lubricating periods as dictated by experience.

Generally, a lower quantity of grease at frequent intervals is more effective than a greater quantity at extended lubrication intervals.

Determine lubrication interval from chart below. Typical lubrication quantity is 1 pump from a standard grease gun.

Bearing Operation Temperature - F° (C°)		**Interval**	
Over	Below		
-	158 (70)	1-2 Months	3-6 Weeks
158 (70)	212 (100)	2-4 Weeks	1-2 Weeks
212 (100)	-	1-7 Days	1-3 Days

6 TROUBLESHOOTING

PROBLEM	CHECK	SOLUTION
Rotor does not spin.	Rotor jammed.	Remove material from rotor.
	Low oil.	Check oil level in skidsteer. Add if necessary.
	Not enough oil flow.	Check flow control on skidsteer. See your dealer.
	Coupler chain damaged or broken (S22).	Replace coupler chain. See Replace Coupler Chain (S22) in maintenance section.
	Shaft keyway(s) sheared off (S22).	Replace keyway(s). 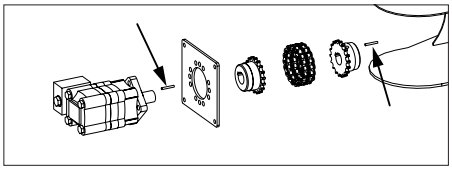
Rotor does not have much power.	Low oil.	Check oil level in skidsteer. Add if necessary.
	Oil filter plugged.	Replace skidsteer oil filter.
	Relief valve not set properly.	Check relief valve on skid steer. See your dealer.
	Low oil flow and pressure.	Check flow control on skidsteer. See your dealer.
	Check to see if rotor can be turn backward with hoses disconnected.	If rotor can be turned, anti-cavitation valve may be stuck open. Remove and clean anti-cavitation valves.
No movement on cylinders.	No oil flow.	Check for plugged or reversed hydraulic lines.
	Fuse blown on swing control.	Replace 30 amp fuse on swing control. Using a fuse of less amperage will blow in regular operation.

7 STORAGE

7.1 Storing Stump Grinder

1. Store stump grinder in a dry place.
2. Clean grinder thoroughly. Dirt and wood chips will draw moisture and cause rust.
3. Lubricate machine. (See Service and Maintenance section.)
4. Check condition of cutting teeth. Replace as necessary. (See Service and Maintenance section.)
5. Check for loose or missing hardware.
6. Paint parts as necessary.

7.2 Removing From Storage

1. Review Operator's manual and check adjustments.
2. Lubricate machine. (See Service and Maintenance section.)
3. If parts have been replaced, verify they run properly.

8 WARRANTY

To view the warranty, scan the QR Code below, or go to Baumalight.com. From the Support drop down, click on Support, then select Stump Grinders. Select Product Warranty.

For parts, specifications and the latest machine information please visit our website.

www.baumalight.com

MTB MFG INC.
CORPORATE HEADQUARTERS
4575 Powell Rd.,
Wallenstein, Ontario Canada
N0B 2S0
www.baumalight.com