BAUMALIGHT™

BAUMALIGHT™

S14 And S18 Stump Grinder

OPERATOR'S MANUAL

Issue Date: October 2026

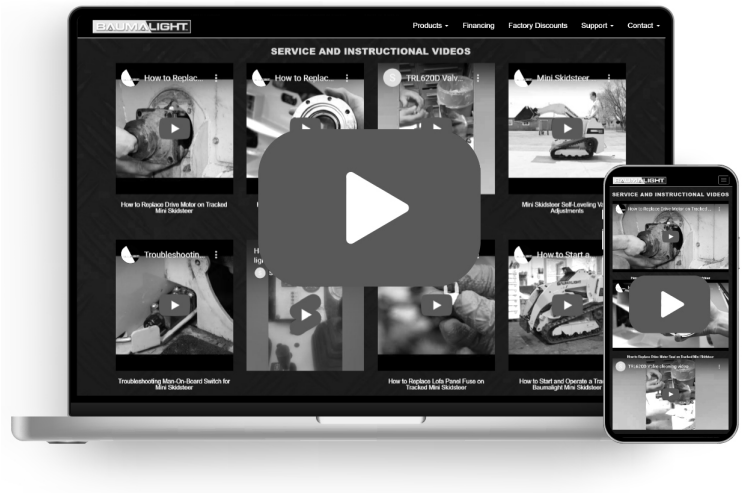

Service And Instructional Videos

Find online at baumalight.com/support

Following is a list of videos and documents available on Baumalights website and also on YouTube to help and enhance maintaining the stump grinder. The list below was current at the time this manual was issued. Additional content may be available.

Activity ID Number	Activity Name	Description	Item Available
76	Stump Grinder Troubleshooting.	No Power Troubleshooting.	Document
104	Remove Seal.	Remove Seal On Motor Or Load Adapter.	Video
174	Rotor Repair And Replacement.	Replace Rotor.	Document
181	First Things To Test.	Wacker Neuson Mini Skid Steer Plate.	Document
193	Chain Coupler.	Replacing Chain On Chain Couplers.	Video
199	Mini Plate Check.	Check Mini Plate.	Document
224	Replacing Teeth.	When To Replace H3000 Teeth.	Video
318	Hydraulic Motor.	Breaking In Replacement Hydraulic Motor.	Video
281	Skidsteer Case Drain Back-Pressure	What may cause skidsteer case drain back-pressure	Video
282	Skidsteer Case Drain Back-Pressure.	Testing Case Drain Back-Pressure With Pressure Gauge.	Video
283	Skidsteer Case Drain Back-Pressure.	Testing Case Drain Back-Pressure With Open Coupler.	Video

TABLE OF CONTENTS

1 INTRODUCTION 4
1.1 Overview 4
1.2 Intended Use And Foreseeable Misuse 5
2 SAFETY 6
2.1 Safety Alert Symbol And Safety Words 6
2.2 Operational Hazards 6
Prepare For Emergencies 7
Replace Safety Signs 8
Do Not Allow Riders 8
Lower Operating Speed 8
Avoid Rollover 8
Avoid Powerlines & Underground Utilities 8
Detach Stump Grinder Safely 8
Hazards From Modifying Equipment 9
2.3 Maintenance Hazards 11
3 SAFETY SIGNS 12
3.1 Safety Signs - S14 12
3.2 Safety Signs - S18 14
4 OPERATION 16
4.1 Preparation for Use 16
4.2 Hydraulic Connections 16
4.3 Machine Components 17
4.4 Attach To Skidsteer 17
4.5 Detach From Skidsteer 18
4.6 Transporting 18
4.7 Carbide Teeth Break-In 19
4.8 First Time User Tips 19
4.9 Field Operation 20
5 SERVICE AND MAINTENANCE 22
5.1 Replace Cutting Teeth - S18 22
5.2 Rotate Cutting Teeth - S14 23
5.3 Replace Cutting Teeth - S14 23
5.4 Replace Tooth Holder - S14 24
5.5 Replace Flex Coupler - S14 24
5.6 Replace Coupler Chain - S18 25
5.7 Maintenance 25
6 TROUBLESHOOTING 26
7 WARRANTY 27

1 INTRODUCTION

1.1 Overview

Congratulations on your choice of a Baumalight Skidsteer Stump Grinder to complement your stump grinding operation. This equipment has been designed and manufactured to meet the needs of a discriminating buyer for efficient grinding of stumps.

This new and unique design allows us to build it very economically and makes it a very compact unit for storage and transport. The self feeding design of the frame and enhanced visibility make the stump grinder easy and efficient to operate. Hydraulic controls are easy to adjust and operate from most skidsteer loaders.

The debris shield is standard equipment on all stump grinders. It is recommended that the stump grinder never be operated with out one.

Safe, efficient and trouble free operation of your Stump Grinder requires that you and anyone else who will be operating or maintaining the Stump Grinder, read and understand the Safety, Operation, Maintenance and Troubleshooting information contained within the Operator's Manual.

This manual covers the S14 and S18 Baumalight Skidsteer Stump Grinders. Use the Table of Contents as a guide to locate required information.

Keep this manual handy for frequent reference and to pass on to new operators or owners. Contact your Baumalight dealer if you need assistance, information or additional copies of the manuals.

OPERATOR ORIENTATION - The directions left, right, front and rear, as mentioned throughout this manual, are as seen from the skidsteer driver's seat and facing in the direction of travel.

1.2 Intended Use And Foreseeable Misuse

The stump grinder is designed to be used by experienced operators, trained in the safe operation of a tractor and trained in the hazards related to using the stump grinder and the safe use of the grinder for the intended purpose. Operators will require personal protective equipment to reduce the risk from some hazards that cannot be completely eliminated or controlled by the design of the tool.

Care is required to ensure that the stump grinder tool will not come across metallic objects, stones or other materials.

Stump grinder tools are not designed for use in hazardous atmospheres where there is a risk of fire or explosion due to flammable gases or vapors. Use in hazardous, explosive atmospheres is prohibited.

Serious injury or death of the operator or bystanders may be caused if the tool is misused. Misuse may also cause damage to the machine carrying the implement.

2 SAFETY

2.1 Safety Alert Symbol And Safety Words

You must read, understand and follow the instructions given by the operating unit manufacturers, as well as the instructions in this manual.

The safety information in this manual is denoted by the safety alert symbol:

This symbol means ATTENTION! BECOME ALERT! YOUR SAFETY IS INVOLVED!

The level of risk is indicated by the following signal words:

DANGER

DANGER - Indicates a hazardous situation, which, if not avoided, WILL result in death or serious injury.

WARNING

WARNING - Indicates a hazardous situation, which, if not avoided, could result in death or serious injury.

CAUTION

CAUTION - Indicates a hazardous situation, which, if not avoided, could result in minor or moderate injury.

NOTICE

NOTICE - Indicates a situation that could result in damage to the equipment or other property.

2.2 Operational Hazards

WARNING

Prevent serious injury or death.

Read and understand this manual before operating stump grinder.

Always stop engine and remove key before leaving operators seat.

Never allow anyone near the stump grinder during operation.

Travel at a safe speed.

WARNING

Prevent serious injury or death from moving parts.

Moving parts can crush and dismember.

Do not operate without guards and shields in place.

Disconnect and lockout power source before adjusting or servicing.

WARNING

Use stump grinder only for the designed applications.

Any other use may result in personal injury, damage to equipment and may void the warranty.

WARNING

Prevent serious injury or death.

Verify stump grinder is locked to quick attach hitch before operation or transport.

WARNING

Protect from flying debris.

Wear proper safety glasses, goggles, or a face shield to protect from flying debris.

WARNING

Prevent serious injury or death.

It is recommended that the operating unit be equipped with a forestry guard to protect the operator.

Carefully read all safety messages in this manual and on equipment safety signs. Keep safety signs in good condition and replace missing or damaged safety signs.

New equipment components and repair parts must include the current safety decal.

Learn how to properly operate equipment. NEVER operate or work around this equipment without proper instruction, while fatigued or under the influence of alcohol, prescription or non-prescription medication or if feeling ill.

Keep your equipment in proper working condition. Know the regulations and laws that apply to you and your industry. This manual is not to replace any regulations or laws. Additional information may be found at: www.asae.org or www.osha.gov. If you do not understand any part of this manual, contact your Baumalight dealer.

Prepare For Emergencies

- Be prepared in case of emergencies.
- Keep a fire extinguisher and first aid kit close to the machine.
- Keep emergency phone numbers close to your phone.
- Know your address so emergency services can locate you if an emergency arises.

Replace Safety Signs

- Replace missing or damaged safety signs.
- Safety signs are identified in Section 3 of this manual.
- Replacement safety signs are available from your Baumalight dealer.

Do Not Allow Riders

- NEVER lift or carry anyone with stump grinder.
- NEVER use stump grinder as a work platform.
- NEVER allow passengers on stump grinder.

Lower Operating Speed

- Lower operating speed while loading, unloading or performing heavy operations.
- Keep load low and move at slow speeds on rough or uneven terrain.

Avoid Rollover

The equipment may rollover, resulting in death or serious injury. To help prevent rollover:

- Travel at a slow speed.
- Avoid sharp turns & sudden movement on slopes.
- Carry loads close to the ground.
- Avoid holes, ditches and other obstructions which may cause equipment to rollover.
- Balance load so weight is evenly distributed and load is stable.
- Use caution when operating on slopes and do not operate on excessively steep slopes.
- Do not exceed load capacity of equipment.

Avoid Powerlines & Underground Utilities

- Check clearance before raising equipment.
- Have local utilities locate and mark under ground wires, cables, pipelines and other hazards before grinding.

⚠ DANGER

Prevent electrocution.

Death or serious injury can result if equipment comes near or contacts power lines.

Electrocution can occur without direct contact.

DO NOT leave the operator's seat if any part of the equipment contacts electric lines or cables.

Detach Stump Grinder Safely

Detach stump grinder on a firm and level surface. Stump grinder may fall over if detached on unlevel or soft surface. Be sure people, livestock and pets are clear of machinery.

Relieve hydraulic pressure before disconnecting hydraulic hoses.

Raised Attachment

⚠ WARNING

Crushing hazard.

Raised, unsupported stump grinder can fall, resulting in death or serious injury.

Never enter the area under a raised stump grinder.

A raised stump grinder can lower unexpectedly, resulting in death or serious injury.

NEVER enter area under a raised stump grinder unless stump grinder is properly and safely supported.

Lower stump grinder to ground, engage parking brake, shut off engine and remove key before servicing.

Hazards From Modifying Equipment

Do not make any alterations to your stump grinder. Altering may cause your equipment to be unsafe and may void the manufacturers' warranty.

Avoid High Pressure Fluids

⚠ WARNING

Pressurized fluids can penetrate the skin.

Hydraulic hoses can fail from age, damage and exposure.

Use body and face protection while searching for leaks. A tiny, almost invisible leak can penetrate the skin, thereby requiring immediate medical attention.

Use wood or cardboard to detect hydraulic leaks, never use your hands.

Escaping fluid under pressure can penetrate the skin causing serious injury.

Prevent the hazard by relieving pressure before connecting or disconnecting hydraulic lines. Verify all connections are tight before applying pressure. Search for leaks with a piece of cardboard or wood. Protect hands and body from high pressure fluids.

If an accident occurs, get immediate medical attention.

Avoid Wood Dust Inhalation

WARNING

Drilling, sawing, sanding or machining wood products can expose you to wood dust, a substance known to the State of California to cause cancer.

Avoid inhaling wood dust or use a dust mask or other safeguards for personal protection. For more information go to www.P65Warnings.ca.gov/wood.

WARNING

Wear an approved dust mask or respirator.

Follow local, state and federal regulations.

Avoid Loud Noise

WARNING

Prolonged exposure to loud noise can cause impairment or loss of hearing.

Wear a suitable hearing protective device such as earmuffs or earplugs to protect against objectionable or uncomfortable loud noises.

2.3 Maintenance Hazards

Before servicing, park machine on a firm and level surface, set parking brake, chock wheels, and place a “Do Not Operate” tag on control panel. Read and understand this manual. If you do not understand any part of the manual, contact your Baumalight dealer.

Always wear face and/or eye protection, safety shoes, and other protective equipment appropriate for the job.

Do not make unauthorized modifications. Contact your Baumalight dealer before you weld, cut/drill holes, or make any other modifications.

WARNING

Moving parts can crush and cut.

Keep clear of moving components.

Follow lockout procedure before servicing.

WARNING

Crushing hazard.

Before performing inspections, service or maintenance:

Park machine on firm, level surface.

Engage parking brake.

Lower stump grinder to the ground.

Turn engine off and remove key.

Place “Do Not Operate” tag on control panel.

WARNING

Entanglement hazard.

Keep clear of moving components.

Wear proper protective equipment appropriate for the job.

WARNING

Burn hazard.

Hot and high pressure hydraulic oil.

Allow oil to cool before servicing.

WARNING

Drilling, sawing, sanding or machining wood products can expose you to wood dust, a substance known to the State of California to cause cancer.

Avoid inhaling wood dust or use a dust mask or other safeguards for personal protection. For more information go to www.P65Warnings.ca.gov/wood.

WARNING

Wear an approved dust mask or respirator.

Follow local, state and federal regulations.

3 SAFETY SIGNS

3.1 Safety Signs - S14

The two and four panel safety decals are pictorial and have a yellow background. The panel with a triangle indicates the potential hazard. The panel without a triangle indicates how to avoid the hazard.

If any of the decals are missing, are damaged, or if you do not understand the decal, please contact your dealer.

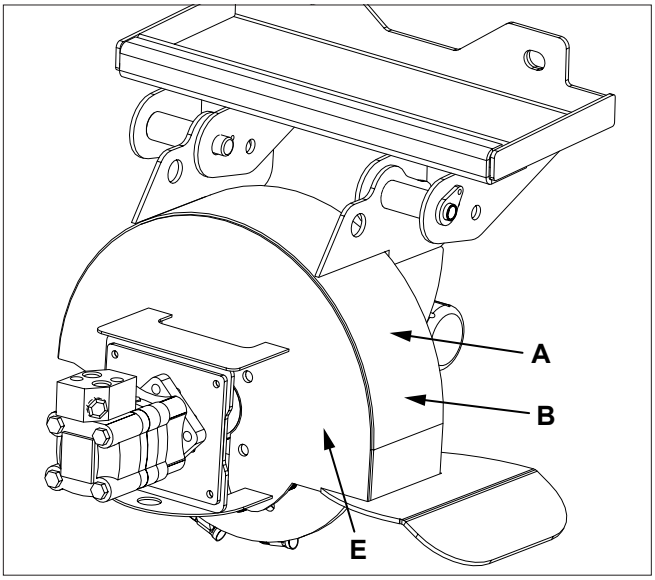

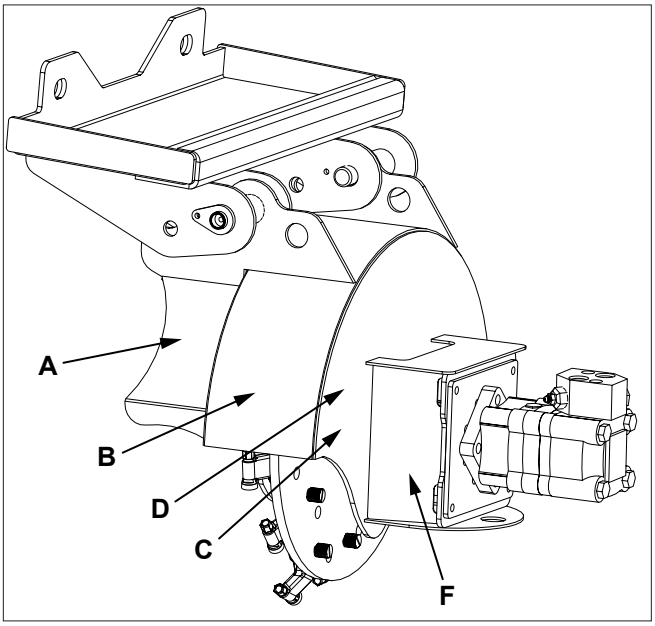

A. D005127 ⚠ WARNING - Pinch point / crush hazard. Do not reach into machine. Keep away from machine.

B. D005223 ⚠ WARNING - Rotating blade hazard. Keep back 75m while machine is operating. Wait for blade to stop before approaching machine.

C. D005126 ⚠ WARNING - Pressurized fluid hazard. Keep away from machine.

D. D005262 ⚠ WARNING - P65 warning information.

⚠ **WARNING:** This product can expose you to chemicals including 1,3-Butadiene and lead, which are known to the state of California to cause cancer and birth defects or other reproductive harm. For more information go to www.P65Warnings.ca.gov.

D005262

E. D005125 ⚠ WARNING - Read and understand safety signs on the machine and operating instructions in this manual before operating machine.

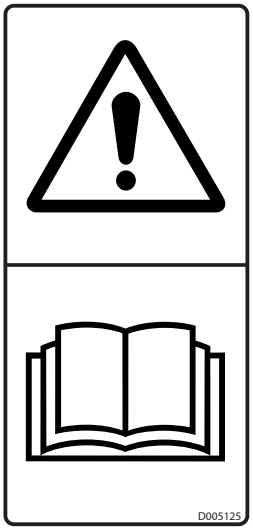

F. D005130 ⚠ WARNING - Rotating parts hazard. Do not reach into machine. Keep away from machine.

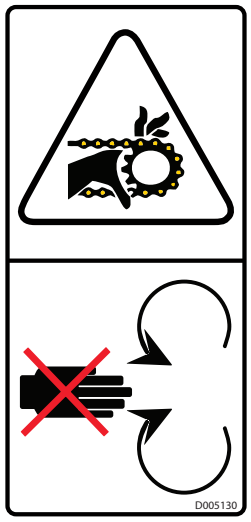

3.2 Safety Signs - S18

The two and four panel safety decals are pictorial and have a yellow background. The panel with a triangle indicates the potential hazard. The panel without a triangle indicates how to avoid the hazard.

If any of the decals are missing, are damaged, or if you do not understand the decal, please contact your dealer.

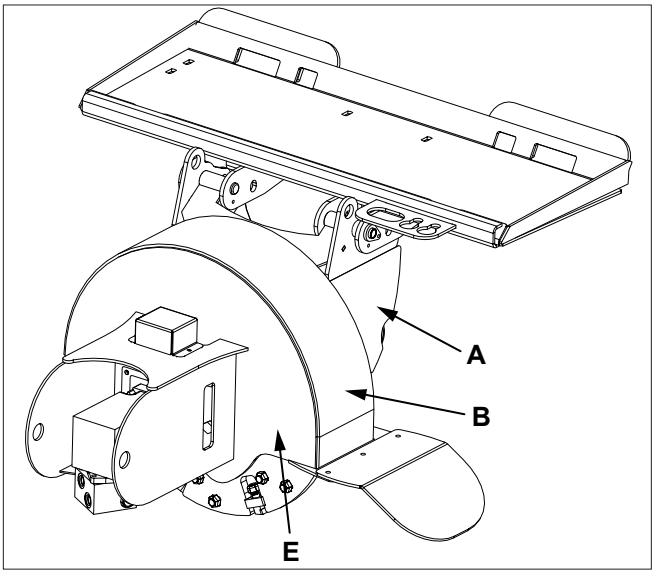

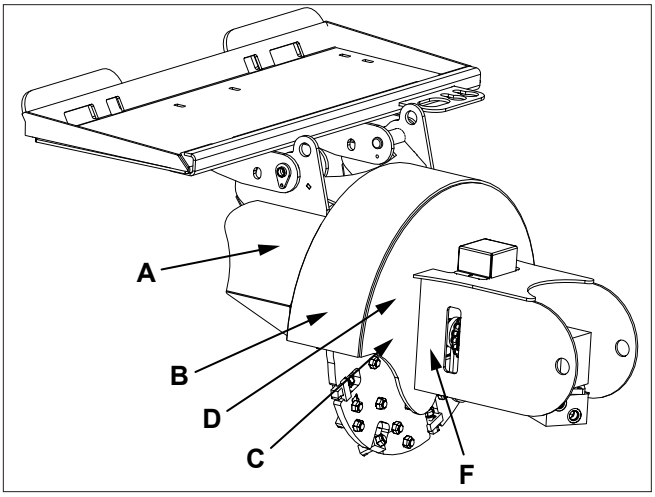

A. D005127 ⚠ WARNING - Pinch point / crush hazard. Do not reach into machine. Keep away from machine.

B. D005223 ⚠ WARNING - Rotating blade hazard. Keep back 75m while machine is operating. Wait for blade to stop before approaching machine.

C. D005126 ⚠ WARNING - Pressurized fluid hazard. Keep away from machine.

D. D005262 ⚠ WARNING - P65 warning information.

⚠ **WARNING:** This product can expose you to chemicals including 1,3-Butadiene and lead, which are known to the state of California to cause cancer and birth defects or other reproductive harm. For more information go to www.P65Warnings.ca.gov.

D005262

E. D005125 ⚠ WARNING - Read and understand safety signs on the machine and operating instructions in this manual before operating machine.

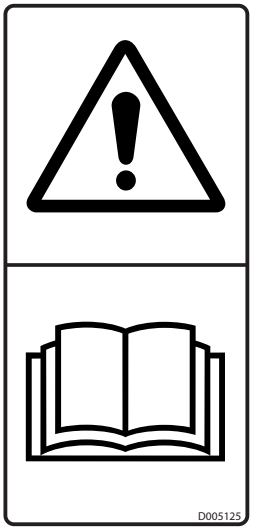

F. D005130 ⚠ WARNING - Rotating parts hazard. Do not reach into machine. Keep away from machine.

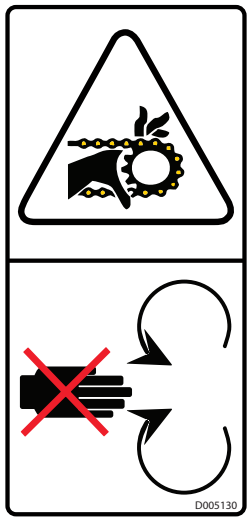

4 OPERATION

4.1 Preparation for Use

Although the stump grinder has been carefully inspected and checked prior to shipment from manufacturer, it is recommended that the unit be thoroughly inspected.

Check all bolts for tightness and remove all shipping tags, bags, skids, and blocking. Check swing frame to ensure that it is free from obstruction and can operate smoothly without binding.

Remove stabilizer pin before use to allow cutting wheel frame to pivot while grinding.

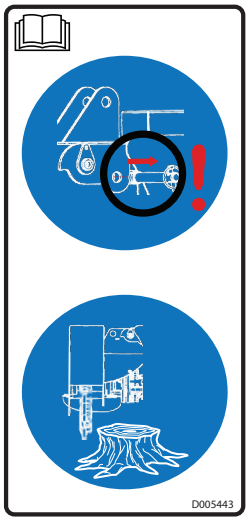

Remove any masking materials affixed during painting. Inspect the skid-steer and any accessory equipment to verify that nameplates and all safety warning, caution signs and decals provided with the equipment are in place and clearly visible.

Visually inspect the unit before each start up. Check for loose or missing parts and any damage that may have occurred during moving or shipping. Review all skidsteer pre-start instructions, and ensure that all recommended steps and procedures have been followed. Never bar over the rotor, This could cause damage and result in personal injury or equipment damage.

The stump grinder must be lifted in a vertical direction only. Due to the weight of the rotor, the device must be adjusted accordingly.

Note: *Always keep the weight of the machine in mind. Never position body in line of impact.*

4.2 Hydraulic Connections

⚠ WARNING

Pressurized fluids can penetrate the skin.

Disconnect and lock out power source before disconnecting and/or connecting hydraulic hoses.

You must connect the pressure, return and case drain (if equipped) hoses from stump grinder to skidsteer hydraulic couplers.

If stump grinder is not equipped with hydraulic couplers, install couplers and connect your skidsteer pressure, return and case drain hoses to the stump grinder hoses. Install your couplers to the hoses listed in the table below.

Fitting Size	Hose Description	Qty.
1/2 JIC FM	Pressure & Return	2
3/8 JIC FM	Case Drain	1

Identify the pressure port hose and connect your hoses to the stump grinder hoses.

4.3 Machine Components

A. Debris Shield

B. Hydraulic Motor

C. Cutting Wheel Shield

D. Quick Attach

E. Manual Storage Tube

F. Cutting Wheel

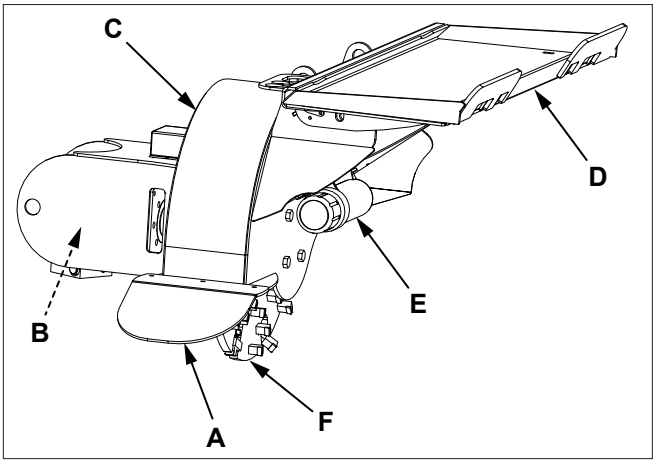

4.4 Attach To Skidsteer

⚠ WARNING

To prevent injury or machine damage put transmission in "Park".

Never position yourself between skidsteer and stump grinder.

Only experienced and properly trained operator's should operate the skidsteer and stump grinder.

1. Read and follow all safety instructions.
2. Attach skidsteer to stump grinder. See skidsteer Operator's Manual.
3. Verify pins are secure in the correct position.
4. Connect hydraulic hoses. Verify hydraulic hoses are clear of pinch areas and moving parts.
5. Move to a clear open area to test functions.

4.5 Detach From Skidsteer

WARNING

Prevent serious injury or death caused by unexpected movement:

1. **Park skidsteer on a level surface.**
2. **Engage skidsteer park brake.**
3. **Disconnect hydraulic hoses.**
4. **Shut off engine and remove key.**

1. Park skidsteer on a level surface.
2. Lower stump grinder to the ground.
3. Shut off engine and remove key.
4. Disconnect hydraulic hoses.
5. Detach skidsteer from stump grinder. See skidsteer Operator's Manual.

4.6 Transporting

1. Verify all reflectors and Slow Moving Vehicle (SMV) sign are visible.
2. Raise stump grinder slightly off ground.
3. Verify hydraulics are disengaged.
4. Travel at a reasonable and safe speed.

WARNING

To prevent bodily injury from rotating cutting wheel, be sure to disengage hydraulics before transporting.

4.7 Carbide Teeth Break-In

During the first few hours of use, avoid hitting stones as much as possible to allow the carbide teeth to wear slightly. This can be done by keeping the cutting wheel above ground level.

Brand new carbide tips are razor sharp and can chip and shatter easily when they hit hard objects. Once the razor sharpness has worn away, the tips do not chip as easily.

Observing these precautions will extend the life of the carbide teeth and reduce operating expenses.

4.8 First Time User Tips

- Before starting, stand to side of stump grinder and look at center point on bottom of cutting wheel, this will appear different from the skidsteer seat and can be very deceiving.
- Operate all functions in an open area with skidsteer in idle to get a good feel for the controls, do not expect to get first stump done fast.
- Run throttle only at half speed for first time users.

⚠ WARNING

Always turn off skidsteer and disengage hydraulic drive before getting off the seat and approaching the cutting wheel.

⚠ WARNING

Drilling, sawing, sanding or machining wood products can expose you to wood dust, a substance known to the State of California to cause cancer.

Avoid inhaling wood dust or use a dust mask or other safeguards for personal protection. For more information go to www.P65Warnings.ca.gov/wood.

⚠ WARNING

Wear an approved dust mask or respirator.

Follow local, state and federal regulations.

4.9 Field Operation

WARNING

Prevent serious injury or death caused by unexpected movement:

1. **Park skidsteer on a level surface.**
2. **Engage skidsteer park brake.**
3. **Disengage hydraulic drive.**
4. **Lower stump grinder to the ground.**
5. **Shut off engine and remove key.**

WARNING

Never operate stump grinder when other people are in the vicinity.

Do not allow riders on skidsteer.

WARNING

Never operate stump grinder when other people are in the vicinity. Debris can be thrown several feet from cutting area. Keep all shields in place.

WARNING

Drilling, sawing, sanding or machining wood products can expose you to wood dust, a substance known to the State of California to cause cancer.

Avoid inhaling wood dust or use a dust mask or other safeguards for personal protection. For more information go to www.P65Warnings.ca.gov/wood.

WARNING

Wear an approved dust mask or respirator.

Follow local, state and federal regulations.

WARNING

Prevent serious injury or death.

It is recommended that the operating unit be equipped with a forestry guard to protect the operator.

1. Attach stump grinder to skidsteer. See Attaching/Detaching in this section.
2. If stump is on a grade, position skidsteer in low area. This will position stump grinder in high area for a greater advantage of weight for stable cutting.

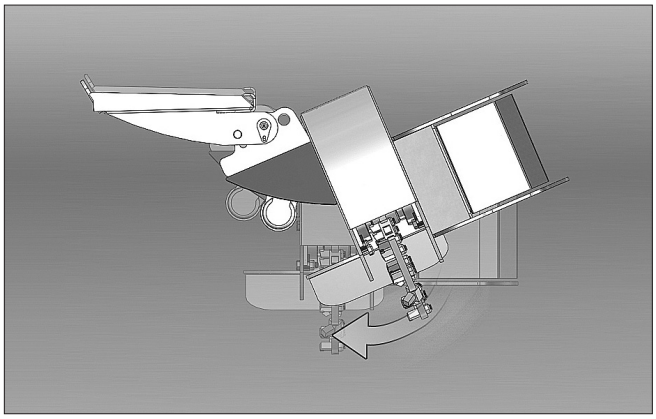

3. Move over stump so cutting wheel torques downward pushing frame up to avoid binding.

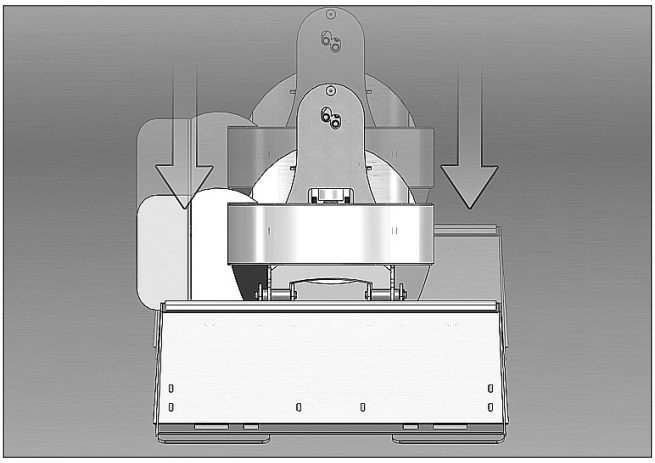

4. Engage cutting wheel and slowly lower it in a controlled manor to desired cutting depth. Always lower cutting wheel beside stump, never try cutting down, always cut sideways.

5. Slowly move into the stump.

6. If cutting wheel stalls, stop motion and raise slightly.

7. After a complete pass, move to home position and lower cutting wheel to desired position for next pass.

8. Continue lowering the passes in this manor until stump is completely removed.

5 SERVICE AND MAINTENANCE

⚠ WARNING

Prevent serious injury or death caused by unexpected movement:

1. **Park skidsteer on a level surface.**
2. **Engage skidsteer park brake.**
3. **Disengage hydraulic drive.**
4. **Lower stump grinder to the ground.**
5. **Shut off engine and remove key.**

⚠ WARNING

Drilling, sawing, sanding or machining wood products can expose you to wood dust, a substance known to the State of California to cause cancer.

Avoid inhaling wood dust or use a dust mask or other safeguards for personal protection. For more information go to www.P65Warnings.ca.gov/wood.

⚠ WARNING

Wear an approved dust mask or respirator.

Follow local, state and federal regulations.

5.1 Replace Cutting Teeth - S18

1. Inspect cutting teeth for damage. Replace individual teeth as needed.
2. Note tooth orientation.
3. Remove lock nut (B) and cutting tooth (A).
4. Install replacement tooth and tighten lock nut to 150 lb/ft (204 Nm) of torque.

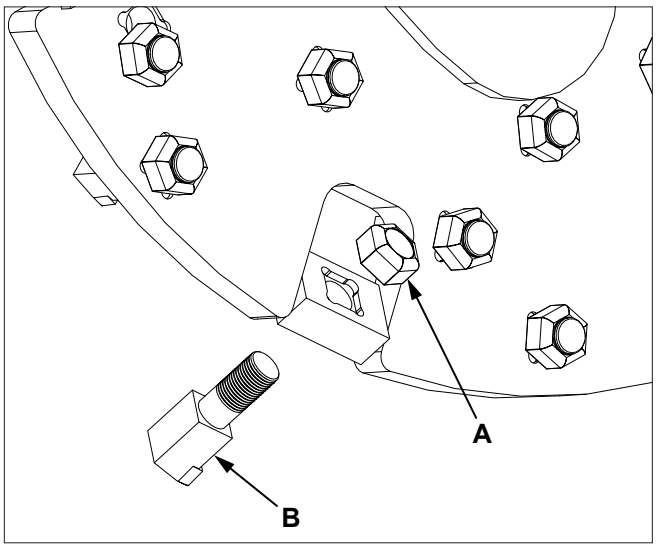

Note: *Parts breakdown can be found on Baumalight's website. www.baumalight.com*

5.2 Rotate Cutting Teeth - S14

Each tooth can be rotated up to two times before replacement is necessary.

1. Park skidsteer and grinder on a level surface.
2. Lower grinder to the ground.
3. Shut off engine and remove key.
4. Inspect teeth for wear on outer edge. Once outer edge is worn, rotate tooth so a new edge is out (cutting).
5. Loosen locknut (A) on tooth (B) and rotate tooth 1/3 turn. Flat shoulder on tooth will fit against shoulder (C) on tooth holder.
6. Tighten locknut (A) to torque listed below.

H3000 Teeth - 35 lb/ft (47 Nm)
G3000 Teeth - 35 lb/ft (47 Nm)
W3000 Teeth - 25 lb/ft (34 Nm)

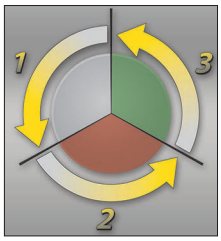

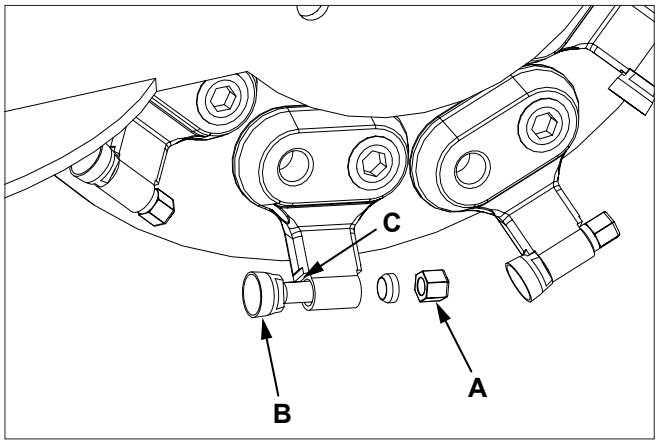

Note: *Parts breakdown can be found on Baumalight's website. www.baumalight.com*

5.3 Replace Cutting Teeth - S14

1. Park skidsteer and grinder on a level surface.
2. Lower grinder to the ground.
3. Shut off engine and remove key.
4. Inspect cutting teeth (B) for damage and wear. Replace individual teeth as needed.
5. Remove locknut (A), spacer (D) and tooth (B). Install new tooth. Flat shoulder on tooth will fit against shoulder (D) on tooth holder.
6. Install spacer (D) and locknut (A).
7. Tighten locknut (A) to torque listed below.

H3000 Teeth - 35 lb/ft (47 Nm)
G3000 Teeth - 35 lb/ft (47 Nm)
W3000 Teeth - 25 lb/ft (34 Nm)

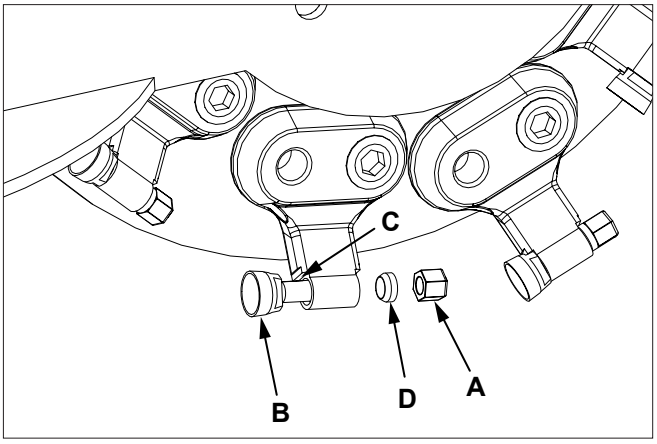

Note: *Parts breakdown can be found on Baumalight's website. www.baumalight.com*

5.4 Replace Tooth Holder - S14

1. Park skidsteer and grinder on a level surface.
2. Lower grinder to the ground.
3. Shut off engine and remove key.
4. Inspect tooth holders (A) for damage and wear. Replace individual tooth holders as needed.
5. Remove tooth from tooth holder.
6. Remove mounting hardware on tooth holder (A). Install new tooth holder, install and tighten mounting hardware.
7. Install tooth into new tooth holder.
8. Tighten tooth locknut to torque listed below.

H3000 Teeth - 35 lb/ft (47 Nm)
G3000 Teeth - 35 lb/ft (47 Nm)
W3000 Teeth - 25 lb/ft (34 Nm)

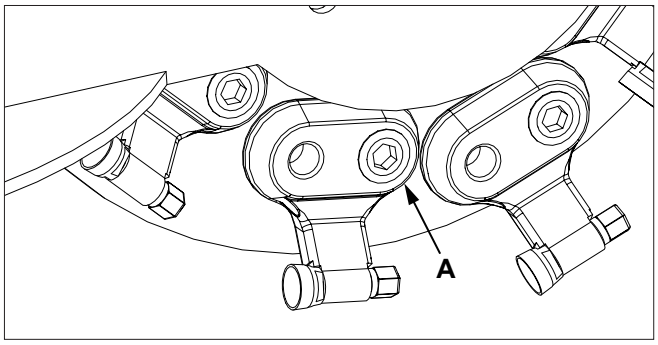

Note: *Parts breakdown can be found on Baumalight's website. www.baumalight.com*

5.5 Replace Flex Coupler - S14

1. Park skidsteer and grinder on a level surface.
2. Lower grinder to the ground.
3. Shut off engine and remove key.
4. Remove four bolts (A) and remove hydraulic motor assembly (B).
5. Remove and replace flex coupler (C).

Note: *Coupler hub on rotor shaft and motor shaft do not have setscrews. Setscrews are not needed in this application.*

6. Install motor assembly (B) and bolts (A).

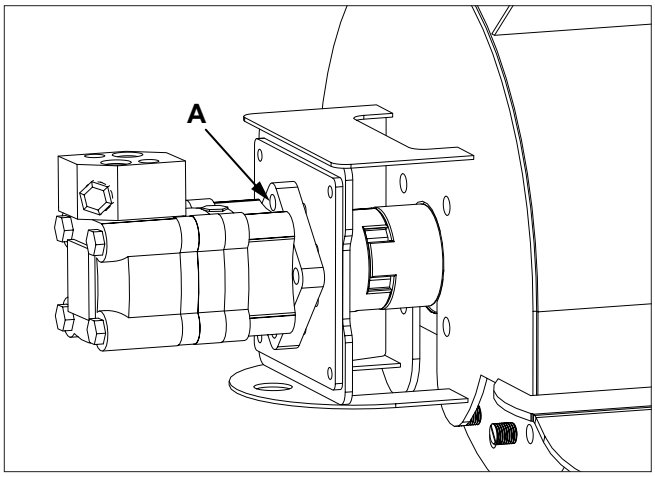

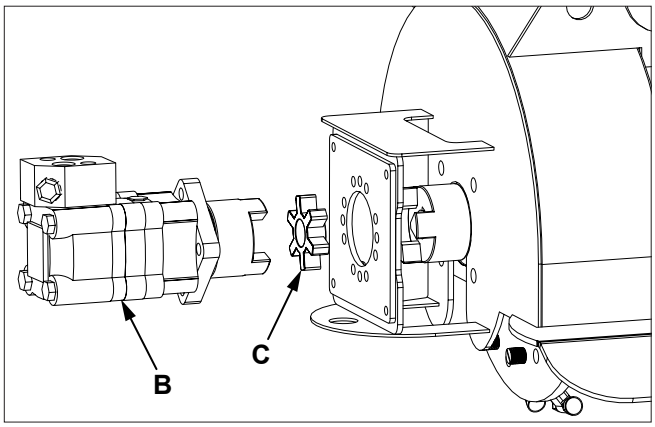

Note: *Parts breakdown can be found on Baumalight's website. www.baumalight.com*

5.6 Replace Coupler Chain - S18

1. Park skidsteer and grinder on a level surface.
2. Lower grinder to the ground.
3. Shut off engine and remove key.
4. Remove master link from coupler chain (A).
5. Remove coupler chain (A).

Note: *Coupler hub on rotor shaft and motor shaft do not have setscrews. Setscrews are not needed in this application.*

6. Install coupler chain (A) and chain master link.

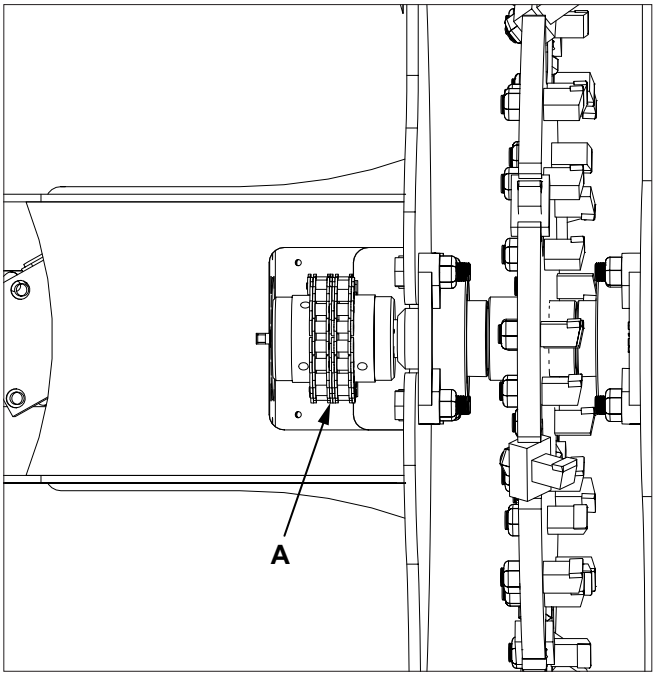

Note: *Parts breakdown can be found on Baumalight's website. www.baumalight.com*

5.7 Maintenance

Check cutting teeth every 4 hours of use.

Inspect the unit for any buildup of contamination (dirt, stones, etc.).

Check hydraulic hoses and fittings for leaks.

Keep cutting teeth in good condition. Unit will cut faster and remaining teeth will last longer if broken teeth are replaced.

6 TROUBLESHOOTING

PROBLEM	CHECK	SOLUTION
Cutting wheel does not spin.	Cutting wheel jammed.	Remove material from cutting wheel.
	Low oil.	Check oil level in skidsteer. Add if necessary.
	Not enough oil flow.	Check flow control on skidsteer. See your dealer.
	Coupler damaged or sheared off.	Replace coupler. See Replace Coupler in maintenance section.
	Shaft keyway sheared off.	Replace keyway(s). 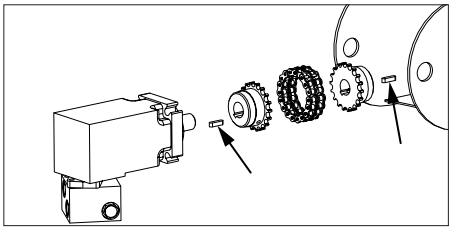
Rotor does not have much power.	Low oil.	Check oil level in skidsteer. Add if necessary.
	Oil filter plugged.	Replace skidsteer oil filter.
	Not enough oil flow.	Check flow control on skidsteer. See your dealer.
	Check to see if rotor can be turn backward with hoses disconnected.	If rotor can be turned, anti-cavitation valve (A) may be stuck open. 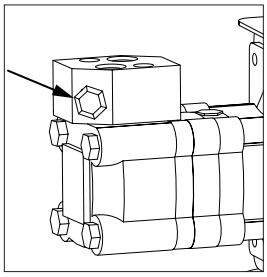 Remove and clean anti-cavitation valve.

7 WARRANTY

To view the warranty, scan the QR Code below, or go to Baumalight.com. From the Support drop down, click on Support, then select Stump Grinders. Select Product Warranty.

For parts, specifications and the latest machine information please visit our website.

www.baumalight.com

MTB MFG INC.
CORPORATE HEADQUARTERS
4575 Powell Rd.,
Wallenstein, Ontario Canada
N0B 2S0
www.baumalight.com