BAUMALIGHT™

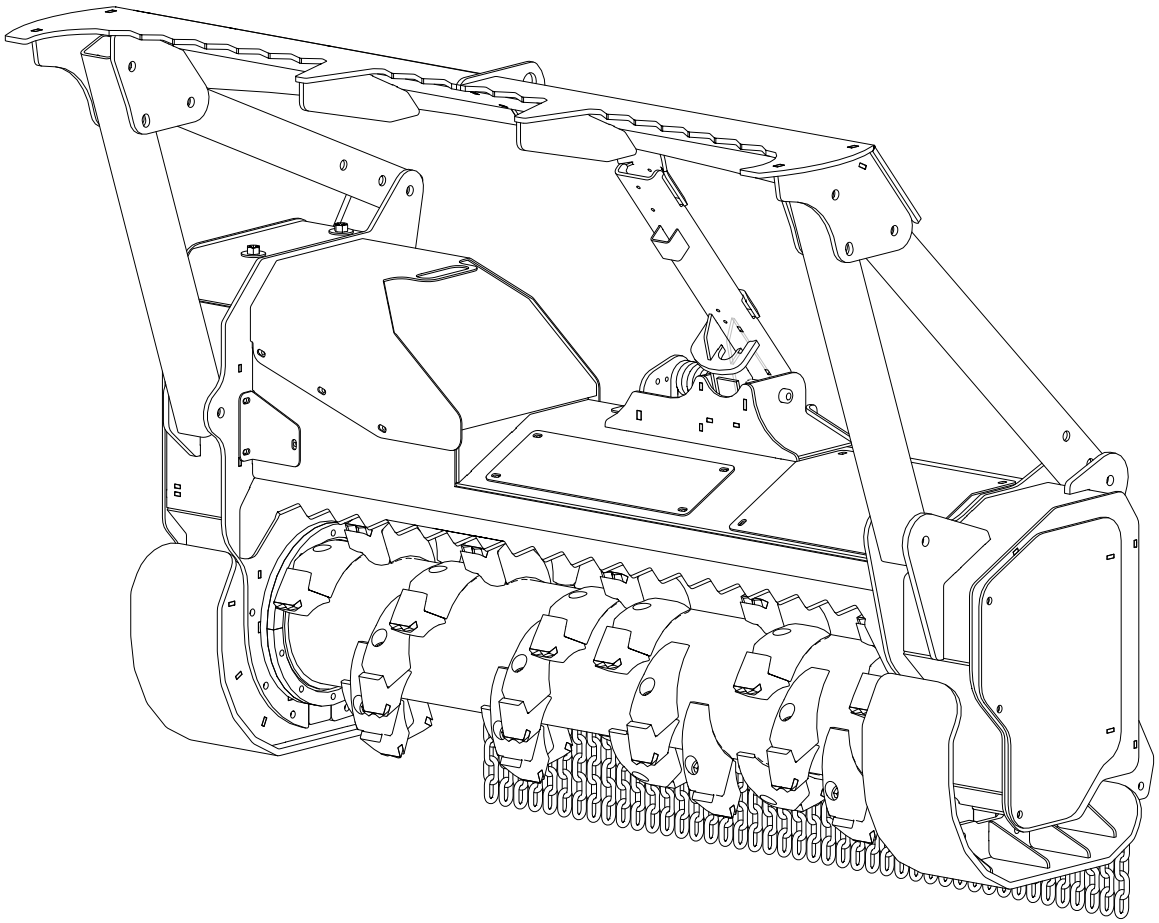

BAUMALIGHT™

MS960, MS972, MS1160 And MS1472
Brush Mulcher

OPERATOR'S MANUAL

Issue Date: October 2026

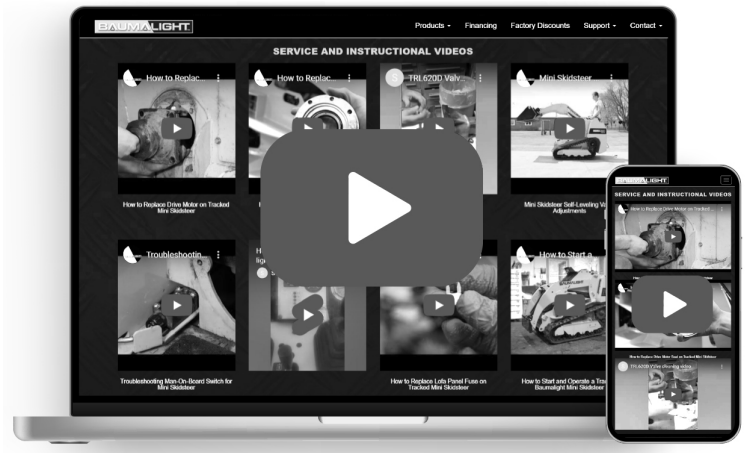

Service And Instructional Videos

Find online at baumalight.com/support

Following is a list of videos and documents available on Baumalights website and also on YouTube to help and enhance maintaining the brush mulcher. The list below was current at the time this manual was issued. Additional content may be available.

Activity ID Number	Activity Name	Description	Item Available
396	Replacing Teeth.	When To Replace P11000 Teeth.	Video
311	Hydraulic Motor.	Breaking In Replacement Hydraulic Motor.	Video
311	Hydraulic Motor.	Breaking In Replacement Hydraulic Motor.	Video
266	Skidsteer Case Drain Back-Pressure.	What May Cause Skidsteer Case Drain Back-Pressure.	Video
267	Skidsteer Case Drain Back-Pressure.	Testing Case Drain Back-Pressure With Pressure Gauge.	Video
268	Skidsteer Case Drain Back-Pressure.	Testing Case Drain Back-Pressure With Open Coupler.	Video
247	Changing Outer Tooth Holder.	Remove Wire Guard Before Replacing Holder.	Document
204	Replacing Teeth.	When To Replace R9000 Teeth.	Video
209	Belt Maintenance.	Install New Belt.	Video
210	Rotor Bearing.	Replacing Rotor Bearing.	Video
211	Rotor Shaft.	Replacing Rotor Shaft.	Video
185	Adjusting 2 Speed Motor.	Trip Point Adjustments.	Video
186	Adjusting 2 Speed Motor.	Speed Adjustments.	Video
129	Replace Overhung Load Adaptor.	Replace Bearing Support For Motor.	Document
136	Replace Motor Shaft Seal.	Replace Shaft Seal On Piston Motor.	Video

Activity ID Number	Activity Name	Description	Item Available
100	Remove Seal.	Remove Seal On Motor Or Load Adapter.	Video
119	Zero-Leak Relief Valve.	Demonstrating And Troubleshooting Zero-Leak.	Video
88	Pressure Not Building Up.	Relief Over Tightened.	Document
43	Mulcher Drive Side Bearing Replacement.	Replace Bearing - Drive Side.	Document
44	Mulcher Bearing Replace Idler Side.	Replace Bearing Idler Side.	Document
45	Torque Chart For Mulchers.	Mulcher Bolts Torque Chart.	Document
55	Excessive Vibration	Troubleshooting	Video
464	Communicating Measurements.	Why Not To Send Pictures Of Measuring Tapes To Communicate Measurements.	Video

TABLE OF CONTENTS

1 INTRODUCTION 5
1.1 Overview 5
1.2 Intended Use And Foreseeable Misuse 5
2 SAFETY 6
2.1 Safety Alert Symbol And Safety Words 6
2.2 Operational Hazards 6
Prepare for Emergencies 7
Replace Safety Signs 7
Do Not Allow Riders 7
Lower Operating Speed 7
Avoid Rollover 8
Avoid Powerlines & Underground Utilities 8
Detach Brush Mulcher Safely 8
Hazards From Modifying Equipment 9
2.3 Maintenance Hazards 10
3 SAFETY SIGNS 12
4 INITIAL SETUP 14
4.1 Hydraulics 14
4.2 Motor Pressure Port 14
4.3 Maximum Allowable Case Pressure 14
4.4 Optional Two Speed Motor Setup 14
4.4.1 Adjust Speed Setting 14
4.4.2 Adjust Trip Point 15
5 OPERATION 16
5.1 Preparation For Use 16
5.2 Pre-Operation Check List 17
5.3 Machine Components 18
5.4 Attach To Skidsteer 19
5.5 Detach From Skidsteer 19
5.6 Transporting 20
5.7 Carbide Teeth Break-In 20
5.8 First Time User Tips 21
5.9 Field Operation 22
5.10 Clearing Jams 24
6 SERVICE AND MAINTENANCE 25
6.1 Maintenance 25
6.2 Inspections 26
6.3 Check Belt Tension 27
6.4 Replace Belt 28
6.5 Replace Cutting Teeth 29
6.6 Zero Leak Case Drain Relief Valve 30
6.7 Lubricate Rotor Bearings 31
7 TROUBLESHOOTING 32
8 STORAGE 33
8.1 Storing Mulcher 33
8.2 Removing Mulcher From Storage 33
9 WARRANTY 34

1 INTRODUCTION

1.1 Overview

Congratulations on your choice of a Baumalight Brush Mulcher to complement your mulching operation. This equipment has been designed and manufactured to meet the needs of a discriminating buyer for efficient mulching of brush.

The rotor is hydraulic powered by the hydraulic system on your skidsteer.

Replaceable bearings are provided at major pivot points for extended service life.

Safe, efficient and trouble free operation of your brush mulcher requires that you and anyone else who will be operating or maintaining the brush mulcher, read and understand the Safety, Operation, Maintenance and Troubleshooting information contained within the Operator's Manual.

This manual covers the Baumalight MS960, MS972, MS1160 and MS1472 Brush Mulchers. Use the Table of Contents as a guide to locate required information.

Keep this manual handy for frequent reference and to pass on to new operators or owners. Contact your Baumalight dealer if you need assistance, information or additional copies of the manuals.

When this machine is worn out and no longer in use, it should be returned to the retailer or other party for recycling.

OPERATOR ORIENTATION - The directions left, right, front and rear, as mentioned throughout this manual, are as seen from the skidsteer driver's seat and facing in the direction of travel.

1.2 Intended Use And Foreseeable Misuse

The brush mulcher is designed to be used by experienced operators, trained in the safe operation of a skidsteer and trained in the hazards related to using the brush mulcher and the safe use of the mulcher for the intended purpose. Operators will require personal protective equipment to reduce the risk from some hazards that cannot be completely eliminated or controlled by the design of the tool.

Care is required to ensure that the brush mulcher tool will not come across metallic objects, stones or other materials.

Brush mulcher tools are not designed for use in hazardous atmospheres where there is a risk of fire or explosion due to flammable gases or vapors. Use in hazardous, explosive atmospheres is prohibited.

Serious injury or death of the operator or bystanders may be caused if the tool is misused. Misuse may also cause damage to the machine carrying the implement.

2 SAFETY

2.1 Safety Alert Symbol And Safety Words

You must read, understand and follow the instructions given by the operating unit manufacturers, as well as the instructions in this manual.

The safety information in this manual is denoted by the safety alert symbol:

This symbol means ATTENTION! BECOME ALERT! YOUR SAFETY IS INVOLVED!

The level of risk is indicated by the following signal words:

DANGER

DANGER - Indicates a hazardous situation, which, if not avoided, WILL result in death or serious injury.

WARNING

WARNING - Indicates a hazardous situation, which, if not avoided, could result in death or serious injury.

CAUTION

CAUTION - Indicates a hazardous situation, which, if not avoided, could result in minor or moderate injury.

NOTICE

NOTICE - Indicates a situation that could result in damage to the equipment or other property.

2.2 Operational Hazards

WARNING

Prevent serious injury or death.

Read and understand this manual before operating brush mulcher.

Always stop engine and remove key before leaving operators seat.

Never allow anyone near the brush mulcher during operation.

Travel at a safe speed.

WARNING

Prevent serious injury or death from moving parts.

Moving parts can crush and dismember.

Do not operate without guards and shields in place.

Disconnect and lock out power source before adjusting or servicing.

WARNING

Use brush mulcher only for the designed applications.

Any other use may result in personal injury, damage to equipment and may void the warranty.

WARNING

Prevent serious injury or death.

Verify brush mulcher is attached to skidsteer before operation or transport.

WARNING

Protect from flying debris.

Wear proper safety glasses, goggles, or a face shield to protect from flying debris.

Carefully read all safety messages in this manual and on equipment safety signs. Keep safety signs in good condition and replace missing or damaged safety signs.

New equipment components and repair parts must include the current safety decal.

Learn how to properly operate equipment. NEVER operate or work around this equipment without proper instruction, while fatigued or under the influence of alcohol, prescription or non-prescription medication or if feeling ill.

Keep your equipment in proper working condition. Know the regulations and laws that apply to you and your industry. This manual is not to replace any regulations or laws. Additional information may be found at: www.asae.org or www.osha.gov. If you do not understand any part of this manual, contact your Baumalight dealer.

Prepare for Emergencies

- Be prepared in case of emergencies.
- Keep a fire extinguisher and first aid kit close to the machine.
- Keep emergency phone numbers close to your phone.
- Know your address so emergency services can locate you if an emergency arises.

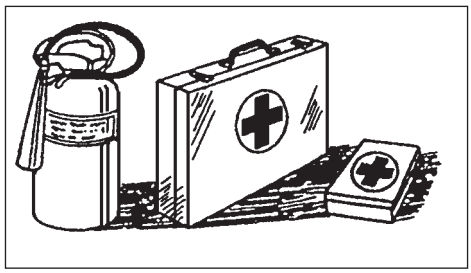

Replace Safety Signs

- Replace missing or damaged safety signs.
- Safety signs are identified in Section 3 of this manual.
- Replacement safety signs are available from your Baumalight dealer.

Do Not Allow Riders

- NEVER lift or carry anyone with brush mulcher.
- NEVER use brush mulcher as a work platform.
- NEVER allow passengers on brush mulcher.

Lower Operating Speed

- Lower operating speed while loading, unloading or performing heavy operations.
- Keep load low and move at slow speeds on rough or uneven terrain.

Avoid Rollover

The equipment may rollover, resulting in death or serious injury. To help prevent rollover:

- Travel at a slow speed.
- Avoid sharp turns & sudden movement on slopes.
- Carry loads close to the ground.
- Avoid holes, ditches and other obstructions which may cause equipment to rollover.
- Balance load so weight is evenly distributed and load is stable.
- Use caution when operating on slopes and do not operate on excessively steep slopes.
- Do not exceed load capacity of equipment.

Avoid Powerlines & Underground Utilities

⚠ DANGER

Prevent electrocution.

Death or serious injury can result if equipment comes near or contacts power lines.

Electrocution can occur without direct contact.

DO NOT leave the operator's seat if any part of the equipment contacts electric lines or cables.

Detach Brush Mulcher Safely

Detach brush mulcher on a firm and level surface. Brush mulcher may fall over if detached on sloping or soft surface. Be sure people, livestock and pets are clear of machinery.

Relieve hydraulic pressure before disconnecting hydraulic hoses. See your skidsteer Operator's Manual.

Raised Attachment

⚠ WARNING

Crushing hazard.

Raised, unsupported brush mulcher can fall, resulting in death or serious injury.

Never enter the area under a raised brush mulcher.

A raised brush mulcher can lower unexpectedly, resulting in death or serious injury.

NEVER enter area under a raised brush mulcher. Lower brush mulcher to ground, engage parking brake, shut off engine and remove key before servicing.

Avoid Loud Noise

WARNING

Prolonged exposure to loud noise can cause impairment or loss of hearing.

Wear a suitable hearing protective device such as earmuffs or earplugs to protect against objectionable or uncomfortable loud noises.

Hazards From Modifying Equipment

Do not make any alterations to your brush mulcher. Altering the equipment may cause unsafe conditions and may void the manufacturer's warranty.

Avoid Wood Dust Inhalation

WARNING

Drilling, sawing, sanding or machining wood products can expose you to wood dust, a substance known to the State of California to cause cancer.

Avoid inhaling wood dust or use a dust mask or other safeguards for personal protection. For more information go to www.P65Warnings.ca.gov/wood.

WARNING

Wear an approved dust mask or respirator.

Follow local, state and federal regulations.

Avoid High Pressure Fluids

WARNING

Pressurized fluids can penetrate the skin.

Hydraulic hoses can fail from age, damage and exposure.

Use body and face protection while searching for leaks. A tiny, almost invisible leak can penetrate the skin, thereby requiring immediate medical attention.

Use wood or cardboard to detect hydraulic leaks, never use your hands.

Escaping fluid under pressure can penetrate the skin causing serious injury.

Prevent the hazard by relieving pressure (See skidsteer Operator's Manual.) before connecting or disconnecting hydraulic lines. Verify all connections are tight before applying pressure.

Search for leaks with a piece of cardboard or wood. Protect hands and body from high pressure fluids. If an accident occurs, see a doctor immediately. Any fluid injected into the skin must be surgically removed within a few hours or serious infection may result.

2.3 Maintenance Hazards

Before servicing, park machine on a firm and level surface, set parking brake, chock wheels, and place a “Do Not Operate” tag on control panel. Read and understand this manual. If you do not understand any part of the manual, contact your Baumalight dealer.

Always wear face and/or eye protection, safety shoes, and other protective equipment appropriate for the job.

Do not make unauthorized modifications. Contact your Baumalight dealer before you weld, cut/drill holes, or make any other modifications.

WARNING

Moving parts can crush and cut.

Keep clear of moving components.

Follow lockout procedure before servicing.

WARNING

Entanglement hazard.

Keep clear of moving components.

Wear proper protective equipment appropriate for the job.

WARNING

Burn hazard.

Hot and high pressure hydraulic oil.

Allow oil to cool before servicing.

WARNING

Crushing hazard.

Before performing inspections, service or maintenance:

Park machine on firm, level surface.

Engage parking brake.

Turn engine off and remove key.

Place “Do Not Operate” tag on control panel.

WARNING

Drilling, sawing, sanding or machining wood products can expose you to wood dust, a substance known to the State of California to cause cancer.

Avoid inhaling wood dust or use a dust mask or other safeguards for personal protection. For more information go to www.P65Warnings.ca.gov/wood.

WARNING

Wear an approved dust mask or respirator.

Follow local, state and federal regulations.

3 SAFETY SIGNS

The two and four panel safety decals are pictorial and have a yellow background. The panel with a triangle indicates the potential hazard. The panel without a triangle indicates how to avoid the hazard.

If any of the decals are missing, are damaged, or if you do not understand the decal, please contact your dealer.

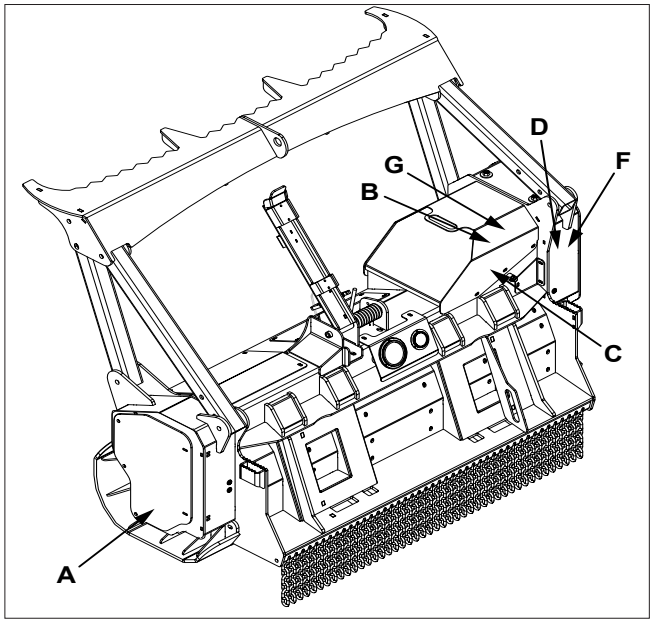

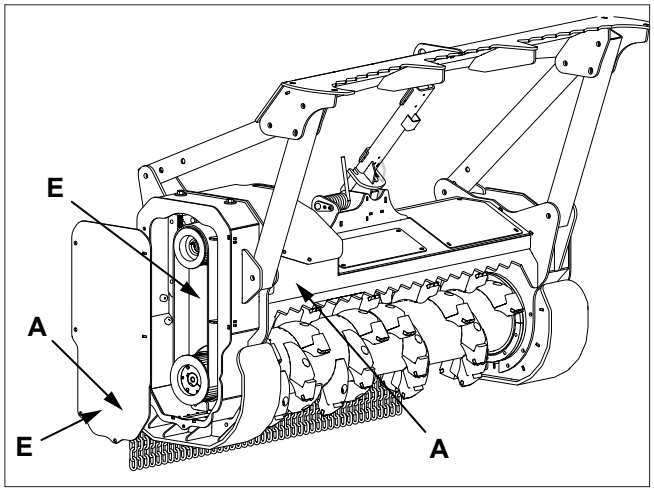

A. D005255 ⚠ WARNING - Rotating blade hazard. Keep back 75 m while machine is operating. Wait for blade to stop before approaching machine.

B. D005262 ⚠ WARNING - P65 warning information.

⚠ **WARNING:** This product can expose you to chemicals including 1,3-Butadiene and lead, which are known to the state of California to cause cancer and birth defects or other reproductive harm. For more information go to www.P65Warnings.ca.gov.

D005262

C. D005253 ⚠ WARNING - Pressurized fluid hazard. Pressurized fluids can penetrate the skin. Do not check for leaks with your hands. Keep back a safe distance when pressurized.

D. D005252 ⚠ WARNING - Read and understand safety signs on the machine and operating instructions in this manual before operating machine.

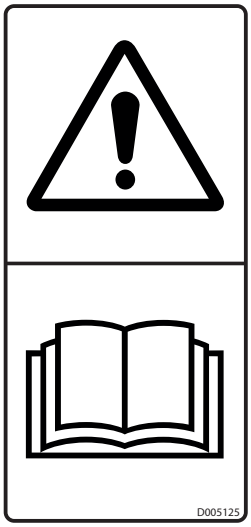

E. D005120 ⚠ WARNING - Rotating parts hazard. Do not reach into machine. Keep away from machine.

F. D005521 ⚠ WARNING - Remove key before servicing.

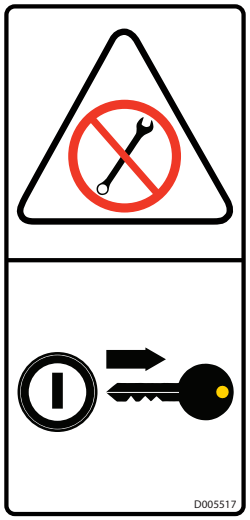

G. D005335 ⚠ WARNING Wear personal protective equipment appropriate for the job.

4 INITIAL SETUP

4.1 Hydraulics

WARNING

Pressurized fluids can penetrate the skin.

Disconnect and lock out power source before disconnecting and/or connecting hydraulic hoses.

The mulcher is equipped with short hoses that are connected to the hydraulic motor. You must connect your skidsteer hoses to these hoses.

Hydraulic couplers are not provided with the mulcher. You must install couplers and connect your skidsteer pressure, return and case drain hoses to the mulcher hoses. Install your couplers to the hoses listed in the table below.

Fitting Size	Hose Description	Qty.
3/4 JIC FM	Pressure & Return	2
1/2 JIC FM	Case Drain	1

Identify the pressure port hose and connect your hoses to the brush mulcher hoses.

4.2 Motor Pressure Port

C930 - A port on block (B port on motor)
C940 - A port on block (B port on motor)
C950 - A port on block (B port on motor)
C970 - A port on block (B port on motor)

4.3 Maximum Allowable Case Pressure

C930 - 100 psi, case drain required.
C940 - 100 psi, case drain required.
C950 - 100 psi, case drain required.
C970 - 100 psi, case drain required.

4.4 Optional Two Speed Motor Setup

The optional two speed motor requires fine tuning to the flow provided by the carrier machine.

The fine tuning will need to be performed in the field while operating in conditions where normal work will be performed.

Baumalight recommends this be done by the Dealer or Territory Sales Rep.

WARNING

Moving parts can crush and cut.

Entanglement hazard.

Keep clear of moving components.

4.4.1 Adjust Speed Setting

Note: *Also refer to the Two Speed Motor Speed Adjustment video available at: https://baumalight.com/support/mulchers.*

1. An RPM meter is required. Open cover and place reflective tape (A) on belt end of rotor shaft.

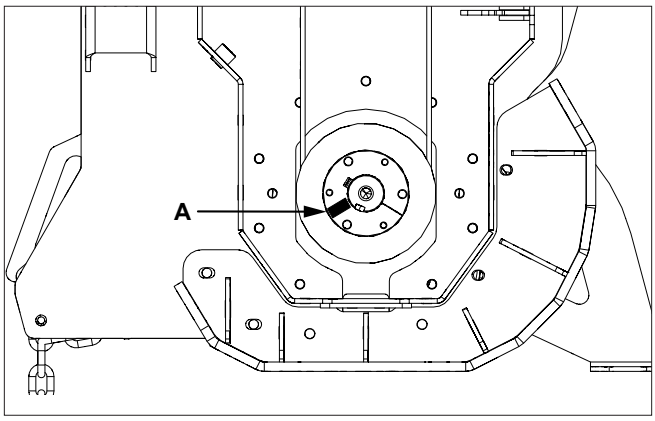

2. Support mulcher to prevent rotor contacting the ground during testing.

3. **For low speed high torque setting:** At full throttle on the carrier machine, 1100-1300 rotor RPM is recommended. To adjust low speed, loosen nut (D) and turn nut (E) out to lower speed or in to raise speed. Turning nut (E) will also turn screw (C), so high speed will need to be reset by turning screw (C) same amount of turns in opposite direction. To maintain a 700 RPM difference between speeds, turn screw only half amount of turns in opposite direction.
4. **For high speed setting:** At full throttle on the carrier machine, 1800-2000 rotor RPM is recommended. To adjust high speed, loosen nut (B) and turn screw (C) out to lower speed or in to raise speed.
5. Tighten nuts (B) and (D) and test operation. Adjust again if necessary.

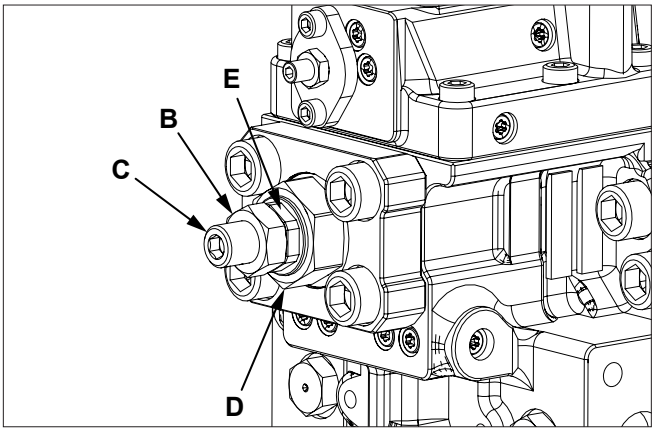

4.4.2 Adjust Trip Point

Note: *Also refer to the Two Speed Motor Trip Point Adjustment video available at: https://baumalight.com/support/mulchers.*

Trip pressure is the setting where the motor switches down to the low speed high torque speed.

To adjust trip point, you will need a dealer provided flow restrictor and a 5000 psi pressure gauge. Pressure gauge is not need if mulcher is equipped with a pressure gauge.

1. Install pressure gauge in pressure line and flow restrictor in return line between the motor and check valve.
2. Operate mulcher and adjust flow restrictor to see pressure when motor switches to low speed.
3. Loosen nut (B) and turn screw (A) to adjust trip point. Turn screw in 1/8 turn increments. Turn screw (A) out to lower trip point or in to raise trip point.

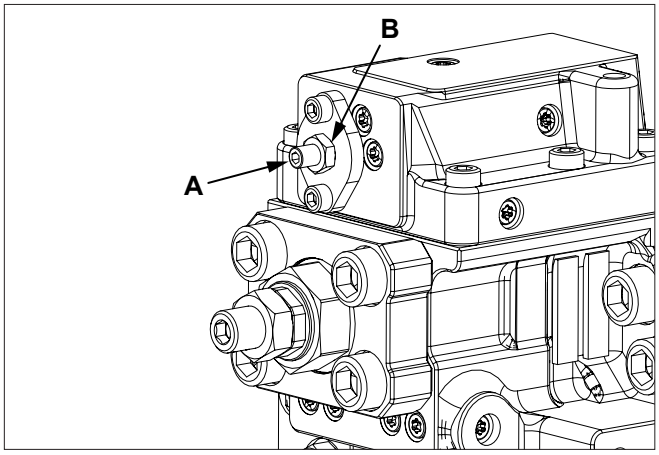

See table below for suggested setting.

Carrier Pressure	Trip Point Pressure
3000 psi (207 bar)	1900 psi (131 bar)
3500 psi (241 bar)	2100 psi (145 bar)
4000 psi (276 bar)	2400 psi (165 bar)

4. Tighten nut (B) and check pressure. Adjust again if necessary.
5. Install or close all covers.

5 OPERATION

5.1 Preparation For Use

WARNING

Drilling, sawing, sanding or machining wood products can expose you to wood dust, a substance known to the State of California to cause cancer.

Avoid inhaling wood dust or use a dust mask or other safeguards for personal protection. For more information go to www.P65Warnings.ca.gov/wood.

WARNING

Wear an approved dust mask or respirator.

Follow local, state and federal regulations.

Although the brush mulcher has been carefully inspected and checked prior to shipment from manufacturer, it is recommended that the unit be thoroughly inspected.

Check all bolts for tightness and remove all shipping tags, bags, skids, and blocking.
Review and understand this manual and operating unit manual.

Remove any masking materials affixed during painting. Inspect the mulcher and any accessory equipment to verify that nameplates and all safety warning, caution signs and decals provided with the equipment are in place and clearly visible.

Visually inspect the unit before each start up. Check for loose or missing parts and any damage that may have occurred during moving or shipping. Review all skidsteer pre-start instructions, and be sure that all recommended steps and procedures have been followed.

Note: *Always keep the weight of the machine in mind. Never position body in line of impact.*

5.2 Pre-Operation Check List

Check-mark	Check these items:	Frequency
	Verify that mulcher is properly attached to skidsteer.	Each operation.
	Verify that hydraulic hoses are connected to skidsteer hydraulic couplers.	Each operation.
	Check for entangled material on rotor.	Each operation.
	Verify all guards, doors and covers are installed and secured.	Each operation.
	Verify cutting teeth on the rotor are tight.	Every 4 hours.
	Check belt chamber.	Every 4 hours.

5.3 Machine Components

Dashed line indicates item hidden from view unless cover is removed.

A. Spring Loaded Hose Support
B. Hydraulic Motor
C. Case Drain Burst Disk
D. Hydraulic And Case Drain Pressure Gauges
E. Quick Attach
F. Chain Curtain
G. Push Bar
H. Directional Felling Hook
I. Rotor
J. Cutting Teeth
K. Adjustable Skid Shoes

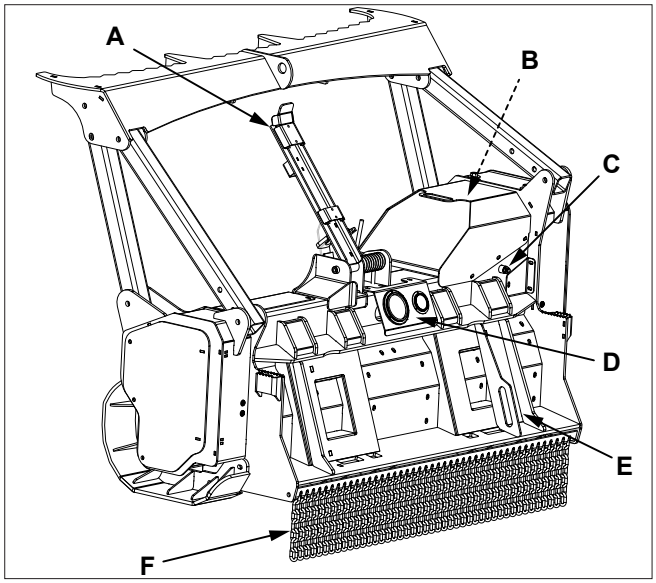

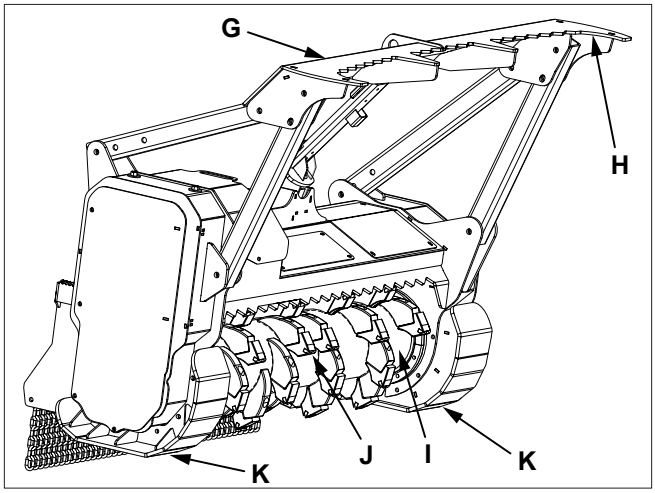

5.4 Attach To Skidsteer

WARNING

To prevent injury or machine damage put transmission in "Park".

Never position yourself between skidsteer and brush mulcher.

Only experienced and properly trained operator's should operate the skidsteer and brush mulcher.

1. Read and follow all safety instructions.
2. Attach mulcher to skidsteer. See skidsteer Operator's Manual.
3. Verify pins are secure in the correct position.
4. Connect hydraulic hoses. Verify hydraulic hoses are clear of pinch areas and moving parts.
5. Move to a clear open area to test functions

5.5 Detach From Skidsteer

WARNING

Prevent serious injury or death caused by unexpected movement:

1. **Park skidsteer on a level surface.**
2. **Engage skidsteer park brake.**
3. **Disconnect hydraulic drive.**
4. **Shut off engine and remove key.**

1. Park skidsteer on a level surface.
2. Lower mulcher to the ground.
3. Shut off engine and remove key.
4. Disconnect hydraulic hoses.
5. Detach mulcher from skidsteer. See skidsteer Operator's Manual

5.6 Transporting

1. Verify all reflectors and Slow Moving Vehicle (SMV) sign are visible.
2. Raise brush mulcher slightly off ground.
3. Verify hydraulics are disengaged.
4. Travel at a reasonable and safe speed.

⚠ WARNING

To prevent bodily injury from rotating cutting wheel, be sure to disengage hydraulics before transporting mulcher.

5.7 Carbide Teeth Break-In

During the first few hours of use, avoid hitting stones as much as possible to allow the carbide teeth (A) to wear slightly. This can be done by keeping the cutting wheel above ground level. Brand new carbide tips are razor sharp and can chip and shatter easily when they hit hard objects. Once the razor sharpness has worn away, the tips do not chip as easily. Observing these precautions will extend the life of the carbide teeth and reduce operating expenses.

The teeth bolts must be retighten every ten minutes for the first hour of use on a new mulcher.

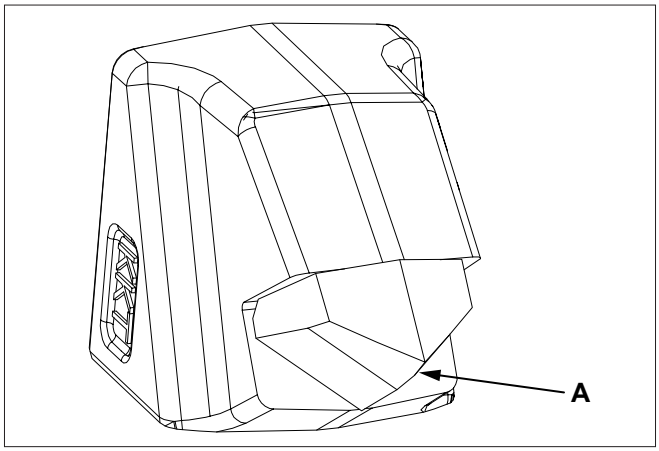

700 Series Teeth

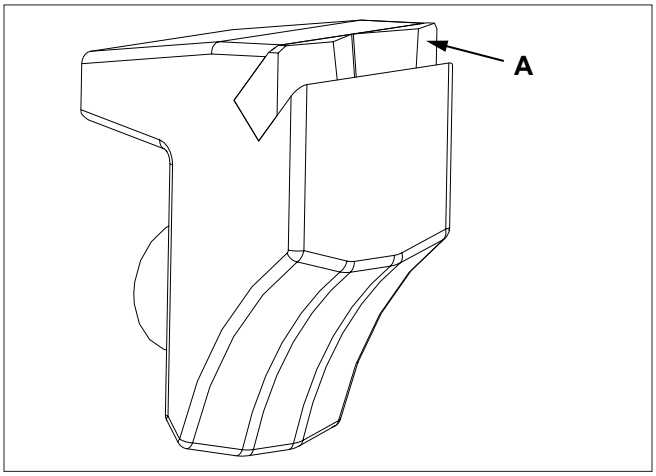

900 Series Teeth

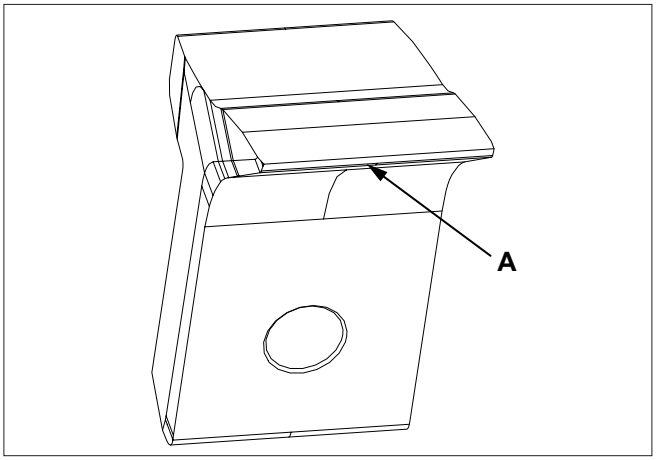

1100 Series Teeth

5.8 First Time User Tips

- First, operate all functions in a clear area with skidsteer at idle speed to get a good feel for the controls before you actually move into any brush.
- Choose low density brush and move into it slowly, do not expect to get the first area done fast.
- Slow travel speed if pressure surges up close to max psi, doing this will greatly reduce rotor jams, and with practice, will almost eliminate jams.
- Run throttle only at half speed for first time users.
- Operate with mulcher slightly raised until you have a better feel how much the unit can take.
- The machine is equipped with a push bar and a felling hook to push brush or small trees over. This will allow the mulcher teeth to contact the lower portion of the brush and mulch it or cut it off. The rest of the plant will be mulched as the machine moves through the working area.
- For tall brush, you can use the push bar to push the brush over and cut it off close to ground. Each operator must experiment to find a technique that works for them in their application.
- Although it is best to mulch when it is dry, the machine works well in wet conditions. However, you must travel slower to do the same quality mulching. It will also be necessary to clean the machine more frequently to prevent caking and clogging of the rotor area.

⚠ WARNING

Always turn off the skidsteer and disengage hydraulic drive before getting off the seat and approaching the cutting wheel.

WARNING

Drilling, sawing, sanding or machining wood products can expose you to wood dust, a substance known to the State of California to cause cancer.

Avoid inhaling wood dust or use a dust mask or other safeguards for personal protection. For more information go to www.P65Warnings.ca.gov/wood.

WARNING

Wear an approved dust mask or respirator.

Follow local, state and federal regulations.

5.9 Field Operation

WARNING

Prevent serious injury or death caused by unexpected movement:

1. **Park skidsteer on a level surface.**
2. **Engage skidsteer park brake.**
3. **Disengage hydraulic drive.**
4. **Shut off engine and remove key.**

WARNING

Never operate brush mulcher when other people are in the vicinity.

Do not allow riders on skidsteer.

WARNING

Never operate brush mulcher when other people are in the vicinity. Debris can be thrown several feet from cutting area. Keep all shields in place.

WARNING

Drilling, sawing, sanding or machining wood products can expose you to wood dust, a substance known to the State of California to cause cancer.

Avoid inhaling wood dust or use a dust mask or other safeguards for personal protection. For more information go to www.P65Warnings.ca.gov/wood.

WARNING

Wear an approved dust mask or respirator.

Follow local, state and federal regulations.

1. Attach brush mulcher to skidsteer. See Attach Brush Mulcher in this section.

WARNING

Prevent serious injury or death.

Operating unit must be equipped with a forestry guard to protect the operator.

2. Lower mulcher so skid plates are on ground.
3. Set engine speed to low idle and engage mulcher.
4. Slowly increase engine speed to high idle. Verify mulcher is operating smoothly and start travel.
5. If mulcher stalls, stop movement, slightly raise mulcher and allow rotor to regain speed. Slow ground speed to prevent further stalling.

WARNING

Moving parts can crush and cut.

Keep clear of moving components.

Lockout operating unit before clearing jams.

WARNING

Never approach brush mulcher before cutting wheel has come to a complete stop.

6. Monitor pressure gauge closely during startup and throughout the cutting process.

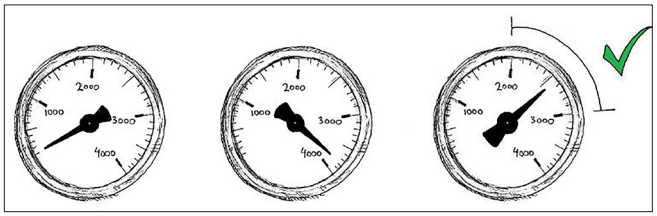

When first starting the rotor, hydraulic pressure on gauge will jump from zero to maximum as the motor works to speed up the rotor. It can take up to thirty seconds for the rotor to reach operational speed. Do not attempt to use the mulcher before operational speed is reached. The spinning momentum of the rotor provides the cutting power.

As operational speed is reached, pressure will drop to 2000 - 3000 psi. Monitor pressure gauge during operation. Maximum cutting performance is with hydraulic pressure between 2000 - 3000 psi.

5.10 Clearing Jams

1. If the rotor stalls, stop rotor motion, raise slightly and try again.
2. If still stalled, lower unit so teeth tips dig slightly into sod, a log or stump.
3. Reverse hydraulic flow to mulcher. Reversing the flow does not power the rotor in the reverse direction, it only opens the hydraulic lock on the rotor. The rotor will not be powered in the reverse direction.
4. Drag the rotor across sod, a log or stump in reverse direction to dislodge the jam.

⚠ WARNING

Always turn off the skidsteer and disengage hydraulic drive before getting off the seat and approaching the cutting wheel.

6 SERVICE AND MAINTENANCE

6.1 Maintenance

Maintenance Chart		
General Inspection	Inspect the unit for any buildup of contamination (dirt, stones, etc.).	Daily
Cutting Teeth	The teeth bolts must be retighten every ten minutes for the first hour of use on a new mulcher.	First hour of use.
Cutting Teeth	Check and replace one at a time as necessary. With daily use expect to replace 4 to 6 teeth per day. See Replace Cutting Teeth in this section.	Every 4 hours.
Drive Belt	Check belt tension, alignment and inspect belt for wear or damage. Replace damaged or worn belt.	Daily.
Rotor Bearings	Check bearings for side-to-side and up/down movement. Replace bearings if movement is found.	Every week.
Rotor Bearings	Lubricate rotor bearings.	1 pump every 250 hours of use.

We design many of our products using industry-standard parts that are widely available from local supply stores.

Many replacement parts such as bearings, belts, seals, touch-up paint and cutting teeth can often be found through local suppliers, not just from Baumalight.

6.2 Inspections

WARNING

Prevent serious injury or death caused by unexpected movement:

1. **Park skidsteer on a level surface.**
2. **Engage skidsteer park brake.**
3. **Disengage hydraulic drive.**
4. **Shut off engine and remove key.**

WARNING

Drilling, sawing, sanding or machining wood products can expose you to wood dust, a substance known to the State of California to cause cancer.

Avoid inhaling wood dust or use a dust mask or other safeguards for personal protection. For more information go to www.P65Warnings.ca.gov/wood.

WARNING

Wear an approved dust mask or respirator.

Follow local, state and federal regulations.

Inspect the unit for any buildup of contamination (dirt, stones, etc.).

Check cutting teeth every 4 hours of use. Keep cutting teeth in good condition. Unit will cut faster and remaining teeth will last longer if broken teeth are replaced.

6.3 Check Belt Tension

Note: *Also refer to the Check Belt video available at: https://baumalight.com/support/mulchers.*

1. Lower mulcher to ground.
2. Set parking brake, stop engine and remove key.

WARNING

Moving parts can crush and cut.

Keep clear of moving components.

Follow lockout procedure before servicing.

3. Remove inspection cover (A).

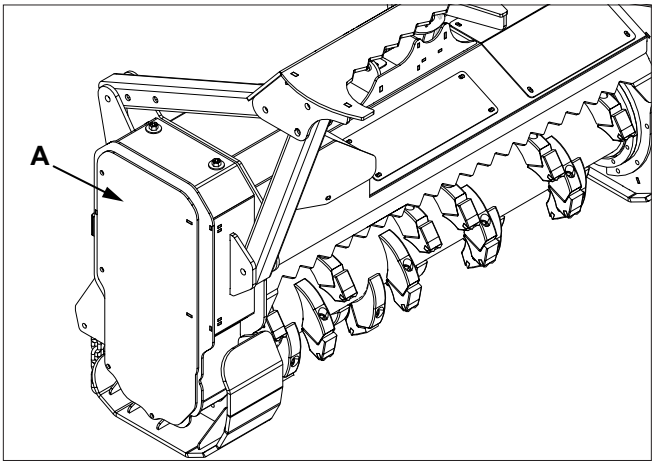

4. Inspect belt (B) for wear, damage, alignment and proper tension.
5. To adjust belt tension, loosen mounting bolts (C).
6. Turn bolts (D) to adjust belt tension.
7. Belt deflection should be 0.5 in. (13 mm) at 3.0 lbs of force for a used belt or 4.25 lbs of force for a new belt.
8. Tighten mounting bolts (C).
9. Place a straight edge (E) on drive pulley and rotor pulley. Pulleys must be aligned or belt will wear quickly. Adjust pulleys if necessary.
10. Install inspection cover (A). Do not operate mulcher with cover (A) removed.

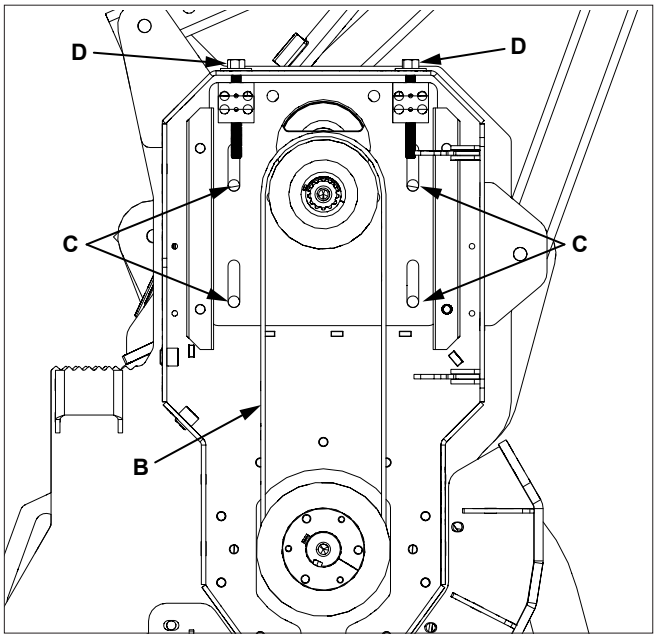

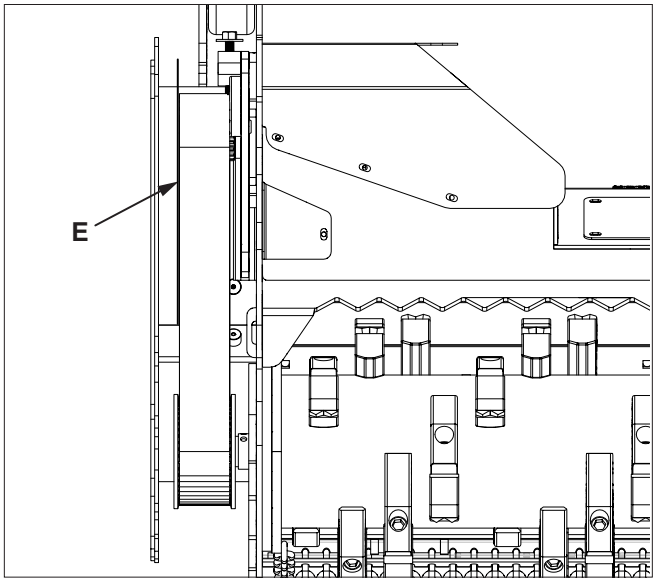

6.4 Replace Belt

Note: *Also refer to the Replace Belt video available at: https://baumalight.com/support/mulchers.*

1. Lower mulcher to ground.
2. Set parking brake, stop engine and remove key.

WARNING

Moving parts can crush and cut.

Keep clear of moving components.

Follow lockout procedure before servicing.

3. Remove inspection cover (A).

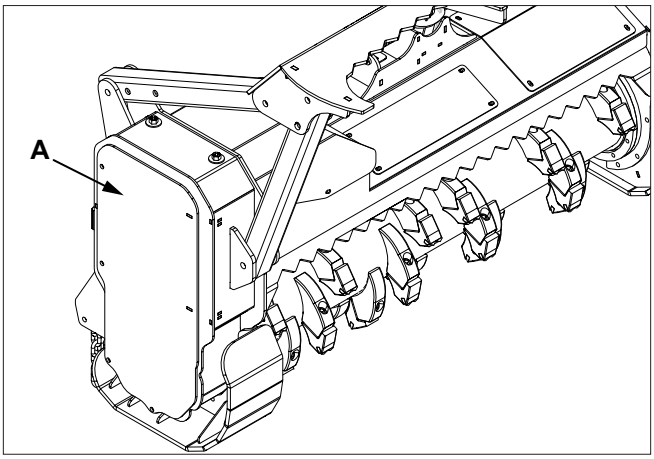

4. Loosen mounting bolts (B). Turn bolts (C) to loosen belt.
5. Remove shaft pulley bolt (D) and washer (E).
6. Remove three hub bolts (F). Place hub bolts into threaded holes (G) in hub (H).
7. Evenly tighten bolts to push pulley (I) off of hub (H).
8. Remove hub (H), pulley (I) and belt (J). It may be necessary to lightly tap hub if hub stuck to shaft.
9. Install belt, pulley and hub onto shaft.
10. Install washer (E) and shaft bolt (D). Tighten bolt.
11. Align pulley holes with non threaded holes in hub (H) and install bolts (F).
12. Place a straight edge on drive pulley and rotor pulley. Pulleys must be aligned or belt will wear quickly. Adjust pulley alignment as necessary and tighten bolts (F).
13. Belt deflection (I) should be 0.5 in. (13 mm) at 4.25 lbs of force.
14. Adjust tension with bolts (C) and tighten mounting bolts (B).
15. Install inspection cover (A). Do not operate mulcher with cover (A) removed.

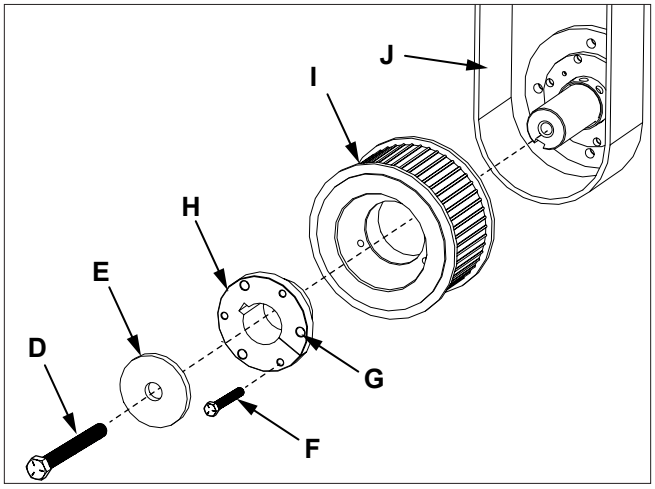

6.5 Replace Cutting Teeth

1. Park skidsteer and mulcher on a level surface.
2. Lower mulcher to the ground.
3. Shut off engine and remove key.
4. Inspect cutting teeth (A) for damage and wear. Replace individual teeth as needed.
5. Remove socket head cap screw (B) and tooth (A). Install new tooth.
6. Tighten socket head cap screw (B) to 170 lb/ft (231 Nm) of torque.

Note: *Parts breakdown can be found on Baumalight's website.* www.baumalight.com

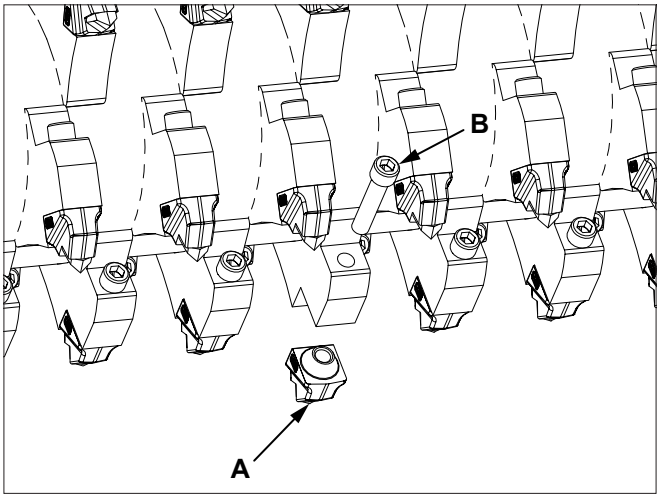

700 Series Teeth

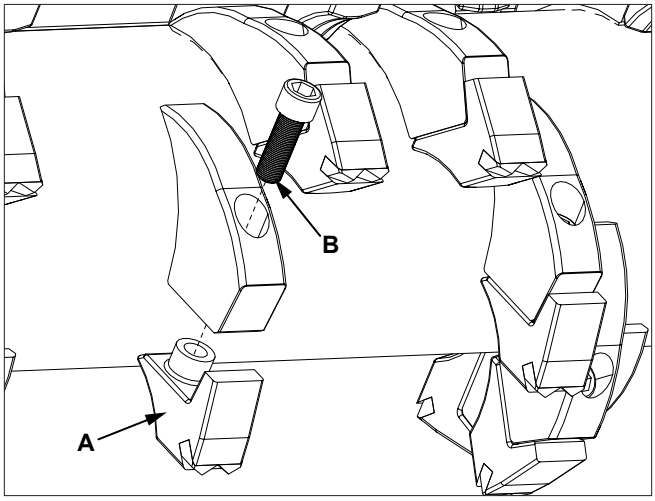

900 Series Teeth

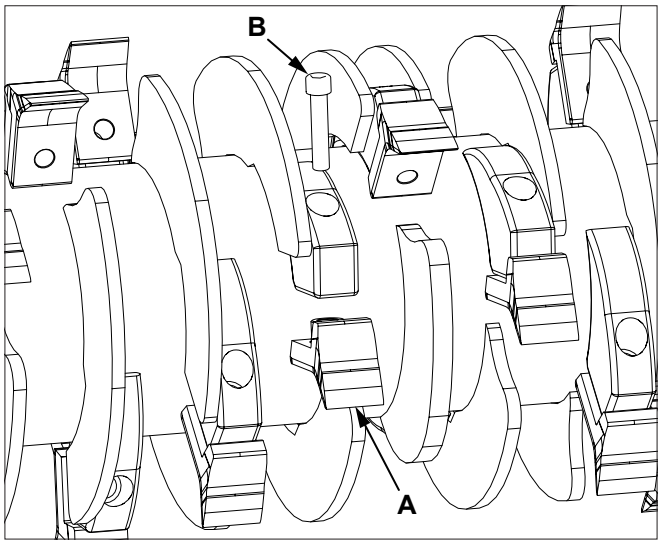

1100 Series Teeth

6.6 Zero Leak Case Drain Relief Valve

The mulcher is equipped with a case drain line that is to be routed to the skidsteer hydraulic reservoir.

It is normal for a hydraulic motor to have a slight amount of internal leakage.

The case drain line will allow this internal leakage to be returned to the reservoir, preventing excessive pressure on the motor seal.

Starting with model year 2022, mulchers will be equipped with a zero leak relief valve (A) installed in the case drain line.

If the case drain line is not connected or becomes obstructed, the zero leak relief valve will vent the pressurized hydraulic fluid to the atmosphere. The zero leak relief valve will self reset after hydraulic pressure reduced.

⚠ WARNING

Pressurized fluids can penetrate the skin.

Keep bystanders away from machine during operation.

A tiny, almost invisible leak can penetrate the skin, thereby requiring immediate medical attention.

If hydraulic fluid is coming out of the zero leak relief valve, shut down machine immediately. Inspect the case drain line connection and lines. Contact your dealer if case drain lines and connection are good.

NOTICE

Environmental hazard.

Clean up any spilled hydraulic fluid immediately.

A properly installed case drain protected by a zero leak relief valve will save the work of replacing the motor shaft seal and also improve the efficiency of your hydraulic system.

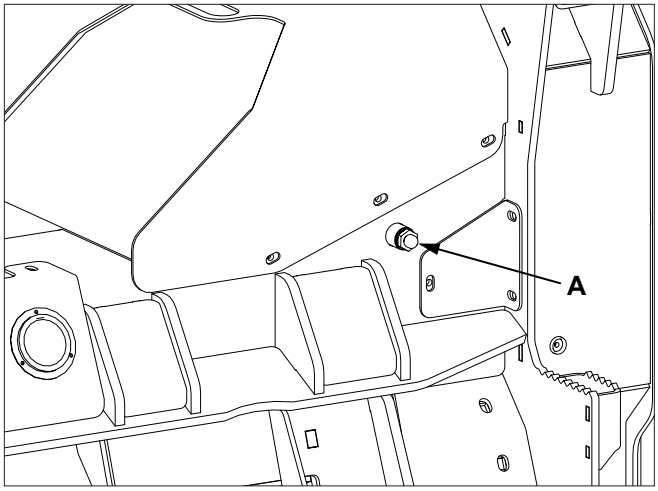

6.7 Lubricate Rotor Bearings

The bearings are factory lubricated with a lithium or lithium complex base grease which is suitable for most applications. Select a grease that is compatible with a lithium or lithium complex grease.

The bearings should contain as much grease as speed will permit. A full bearing with consequent slight leakage through the seal is the best protection against contaminant entry.

Extreme situations may require a change in lubricating periods as dictated by experience.

Generally, a lower quantity of grease at frequent intervals is more effective than a greater quantity at extended lubrication intervals.

Typical lubrication quantity is 1 pump from a standard grease gun every 250 hours of use.

In the higher speed ranges too much grease will cause overheating. The amount of grease that the bearing will take for a particular high speed application can be determined only by experience. If excess grease in the bearing caused overheating, it will be necessary to remove grease fitting to permit excess grease to escape.

7 TROUBLESHOOTING

PROBLEM	CHECK	SOLUTION
Rotor does not spin.	Check drive belt.	Replace belt if damaged or broken.
	Rotor jammed.	Remove material from rotor. See Clearing Jams.
	Low oil level.	Check oil level in skidsteer. Add if necessary.
	Low oil flow.	Check flow control on skidsteer. See your dealer.
	Low pressure.	Check valve open. See 5.10 Clearing Jams.
	Can drum be turned by hand with the hydraulics disconnected?	If yes, check for a stuck relief valve. If no, loosen belt to determine if the rotor is stuck or the motor or over hung load adaptor are stuck. If the motor or overhung load adaptor is stuck, remove and determine cause of problem.
Rotor rotates slow or sluggish.	Low oil.	Check oil level in skidsteer. Add if necessary.
	Oil filter plugged	Replace skidsteer oil filter.
	Relief valve not set properly.	Set relief pressure to motor specification.
	Low oil flow.	Check flow control on skidsteer. See your dealer.
	Drive belt loose.	Tighten drive belt.
	Couplers/lines connected improperly.	Verify that couplers are connected to the correct inputs on your machine: Pressure - Red zip tie Return - no markers Case drain - smaller line
Excessive vibration.	Cutting teeth worn or missing.	Replace worn, broken or missing teeth.
	Debris lodged in rotor.	Remove debris
Hydraulic fluid coming out of zero leak relief valve.	Case drain connector for proper connection and line for obstructions or pinched line.	Connect case drain line if not connected. Replace line if damage, obstructed or pinched.
	Combo coupler seals.	Combo coupler seals may be leaking, allowing pressurized fluid to escape to the case drain line.

8 STORAGE

8.1 Storing Mulcher

1. Store mulcher in a dry place.
2. Clean mulcher thoroughly. Dirt and wood chips will draw moisture and cause rust.
3. Check condition of cutting teeth. Replace as necessary. (See Service and Maintenance section.)
4. Check for loose or missing hardware.
5. Paint parts as necessary.

8.2 Removing Mulcher From Storage

1. Review Operator's manual and check adjustments.
2. If parts have been replaced, verify they run properly.

9 WARRANTY

To view the warranty, scan the QR Code below, or go to Baumalight.com. From the Support drop down, click on Support, then select Brush Mulchers. Select Product Warranty.

For parts, specifications and the latest machine information please visit our website.
www.baumalight.com

MTB MFG INC.
CORPORATE HEADQUARTERS
4575 Powell Rd.,
Wallenstein, Ontario Canada
N0B 2S0
www.baumalight.com