BAUMALIGHT™

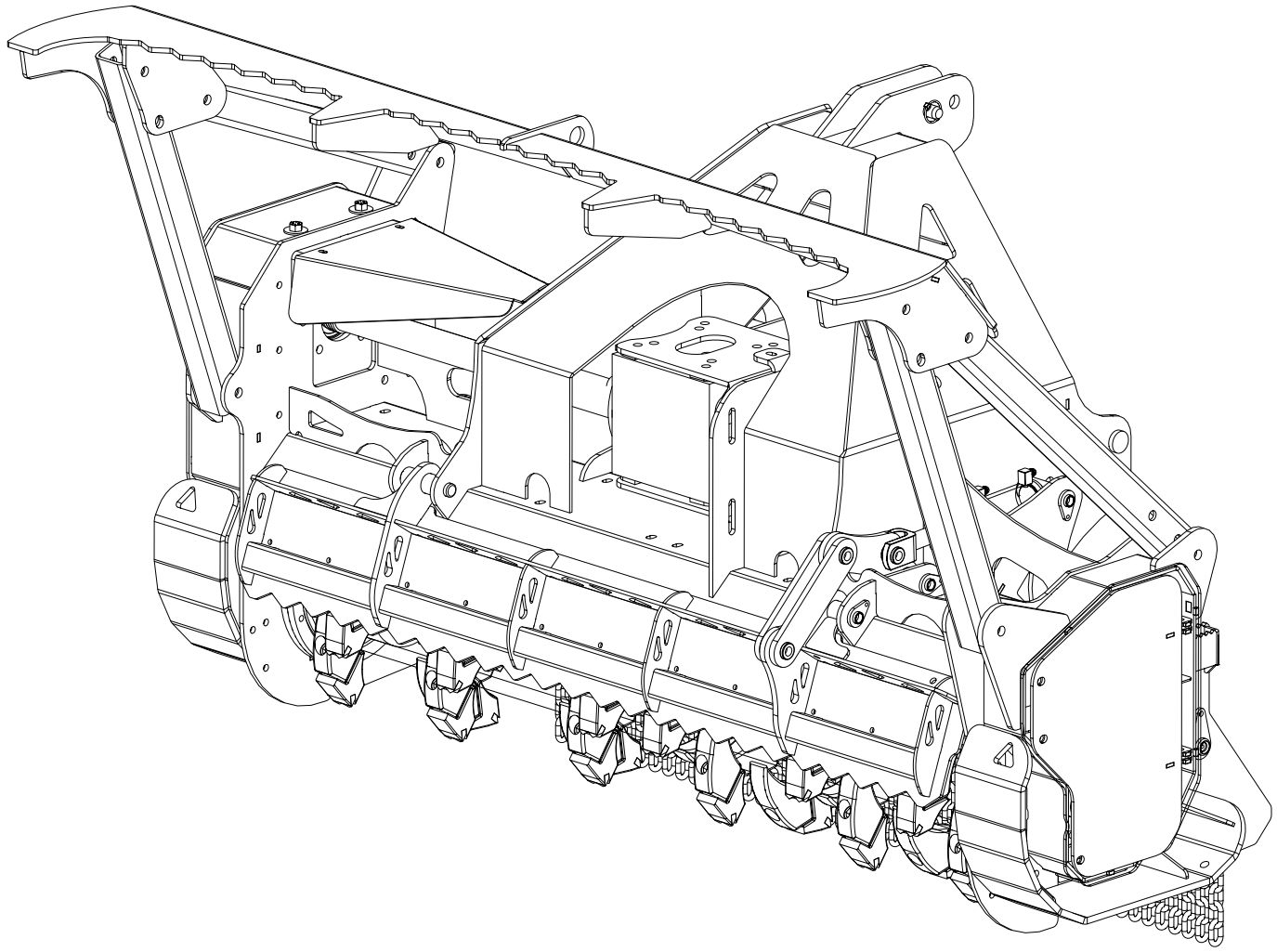

BAUMALIGHT™

MP972 Brush Mulcher

OPERATOR'S MANUAL

Issue Date: October 2026

Service And Instructional Videos

Find online at baumalight.com/support

Following is a list of videos and documents available on Baumalights website and also on YouTube to help and enhance maintaining the brush mulcher. The list below was current at the time this manual was issued. Additional content may be available.

Activity ID Number	Activity Name	Description	Item Available
295	Belt Maintenance	Install new belt	Video
225	Slip Clutch Information	Burnt Clutch	Document
242	PTO Shaft	Determining PTO shaft length	Video
247	Changing Outer Tooth Holder	Remove wire guard before replacing holder	Document
204	Replacing Teeth	When to replace R9000 teeth	Video
210	Rotor Bearing	Replacing rotor bearing	Video
211	Rotor Shaft	Replacing rotor shaft	Video
88	Pressure not building up	Relief over tightened	Document
43	Mulcher drive side bearing replacement	Replace bearing - drive side	Document
44	Mulcher bearing replace idler side	Replace bearing idler side	Document
45	Torque chart for Mulchers	Mulcher bolts torque chart	Document
55	Excessive Vibration	Troubleshooting excessive vibration	Video
48	How To Replace A Jack Shaft On 300 And 500 Series MP Mulchers	Replace Jackshaft On 300 And 500 Series MP Mulchers	Document
52	Bending Idler Bracket Instruction	Bending Idler Bracket To Control Where Belt Runs On Pulleys.	Document
55	Excessive Vibration	Troubleshooting.	Document

Activity ID Number	Activity Name	Description	Item Available
429	Hydraulic Cylinder.	Replacing Seals On Hydraulic Cylinder.	Video
464	Communicating Measurements.	Why Not To Send Pictures Of Measuring Tapes To Communicate Measurements.	Video

TABLE OF CONTENTS

1 INTRODUCTION 5
1.1 Overview 5
1.2 Intended Use And Foreseeable Misuse 5
2 SAFETY 6
2.1 Safety Alert Symbol And Safety Words 6
2.2 Operational Hazards 7
Prepare For Emergencies 8
Replace Safety Signs 8
Do Not Allow Riders 8
Lower Operating Speed 8
Avoid Rollover 8
Avoid Powerlines & Underground Utilities 8
Detach Brush Mulcher Safely 8
Hazards From Modifying Equipment 9
2.3 Maintenance Hazards 10
3 SAFETY SIGNS 12
4 OPERATION 14
4.1 Preparation For Use 14
4.2 Driveshaft Dimension 14
4.3 Pre-Operation Check List 15
4.4 Machine Components 16
4.5 Attach Brush Mulcher 16
4.6 Detach Brush Mulcher 17
4.7 Transporting 17
4.8 Carbide Teeth Break-In 17
4.9 First Time User Tips 18
4.10 Field Operation 19
5 SERVICE AND MAINTENANCE 20
5.1 Maintenance 20
5.2 Inspections 21
5.3 Check Belt Tension 22
5.4 Replace Belt 23
5.5 Adjust Slip Clutch 24
5.6 Lubricate Rotor Bearings 26
5.7 Replace Cutting Teeth 27
5.8 Check Gearbox Oil Level 27
6 TROUBLESHOOTING 28
7 STORAGE 29
7.1 Storing Mulcher 29
7.2 Removing Mulcher From Storage 29
7.2.1 Slip Clutch 29
8 WARRANTY 30

1 INTRODUCTION

1.1 Overview

Congratulations on your choice of a Baumalight Brush Mulcher to complement your mulching operation. This equipment has been designed and manufactured to meet the needs of a discriminating buyer.

The cutting wheel is powered by the PTO on your tractor.

Replaceable bearings are provided at major pivot points for extended service life.

Safe, efficient and trouble free operation of your brush mulcher requires that you and anyone else who will be operating or maintaining the brush mulcher, read and understand the Safety, Operation, Maintenance and Troubleshooting information contained within the Operator's Manual.

This manual covers the MP972 Baumalight Brush Mulcher. Use the Table of Contents as a guide to locate required information.

Keep this manual handy for frequent reference and to pass on to new operators or owners. Contact your Baumalight dealer if you need assistance, information or additional copies of the manuals.

When this machine is worn out and no longer in use, it should be returned to the retailer or other party for recycling.

OPERATOR ORIENTATION - The directions left, right, front and rear, as mentioned throughout this manual, are as seen from the tractor driver's seat and facing in the direction of travel.

1.2 Intended Use And Foreseeable Misuse

The brush mulcher is designed to be used by experienced operators, trained in the safe operation of a tractor and trained in the hazards related to using the brush mulcher and the safe use of the mulcher for the intended purpose. Operators will require personal protective equipment to reduce the risk from some hazards that cannot be completely eliminated or controlled by the design of the tool.

Care is required to ensure that the brush mulcher tool will not come across metallic objects, stones or other materials.

Brush mulcher tools are not designed for use in hazardous atmospheres where there is a risk of fire or explosion due to flammable gases or vapours. Use in hazardous, explosive atmospheres is prohibited.

Serious injury or death of the operator or bystanders may be caused if the tool is misused. Misuse may also cause damage to the machine carrying the implement.

2 SAFETY

2.1 Safety Alert Symbol And Safety Words

You must read, understand and follow the instructions given by the operating unit manufacturers, as well as the instructions in this manual.

The safety information in this manual is denoted by the safety alert symbol:

This symbol means ATTENTION! BECOME ALERT! YOUR SAFETY IS INVOLVED!

The level of risk is indicated by the following signal words:

DANGER

DANGER - Indicates a hazardous situation, which, if not avoided, WILL result in death or serious injury.

WARNING

WARNING - Indicates a hazardous situation, which, if not avoided, could result in death or serious injury.

CAUTION

CAUTION - Indicates a hazardous situation, which, if not avoided, could result in minor or moderate injury.

NOTICE

NOTICE - Indicates a situation that could result in damage to the equipment or other property.

2.2 Operational Hazards

WARNING

Prevent serious injury or death.

Read and understand this manual before operating brush mulcher.

Always stop engine and remove key before leaving operators seat.

Never allow anyone near the brush mulcher during operation.

Travel at a safe speed.

WARNING

Prevent serious injury or death from moving parts.

Moving parts can crush and dismember.

Do not operate without guards and shields in place.

Disconnect and lock out power source before adjusting or servicing.

WARNING

Use brush mulcher only for the designed applications.

Any other use may result in personal injury, damage to equipment and may void the warranty.

WARNING

Prevent serious injury or death.

Verify brush mulcher is attached to tractor before operation or transport.

WARNING

Protect from flying debris.

Wear proper safety glasses, goggles, or a face shield to protect from flying debris.

Carefully read all safety messages in this manual and on equipment safety signs. Keep safety signs in good condition and replace missing or damaged safety signs.

New equipment components and repair parts must include the current safety decal.

Learn how to properly operate equipment. NEVER operate or work around this equipment without proper instruction, while fatigued or under the influence of alcohol, prescription or non-prescription medication or if feeling ill.

Keep your equipment in proper working condition.

Know the regulations and laws that apply to you and your industry. This manual is not to replace any regulations or laws. Additional information may be found at: www.asae.org or www.osha.gov.

If you do not understand any part of this manual, contact your Baumalight dealer.

Prepare For Emergencies

- Be prepared in case of emergencies.
- Keep a fire extinguisher and first aid kit close to the machine.
- Keep emergency phone numbers close to your phone.
- Know your address so emergency services can locate you if an emergency arises.

Replace Safety Signs

- Replace missing or damaged safety signs.
- Safety signs are identified in Section 3 of this manual.
- Replacement safety signs are available from your Baumalight dealer.

Do Not Allow Riders

- NEVER lift or carry anyone with brush mulcher.
- NEVER use brush mulcher as a work platform.
- NEVER allow passengers on brush mulcher.

Lower Operating Speed

- Lower operating speed while loading, unloading or performing heavy operations.
- Keep load low and move at slow speeds on rough or uneven terrain.

Avoid Rollover

The equipment may rollover, resulting in death or serious injury. To help prevent rollover:

- Travel at a slow speed.
- Avoid sharp turns & sudden movement on slopes.
- Carry loads close to the ground.
- Avoid holes, ditches and other obstructions which may cause equipment to rollover.
- Balance load so weight is evenly distributed and load is stable.
- Use caution when operating on slopes and do not operate on excessively steep slopes.
- Do not exceed load capacity of equipment.

Avoid Powerlines & Underground Utilities

⚠ DANGER

Prevent electrocution.

Death or serious injury can result if equipment comes near or contacts power lines.

Electrocution can occur without direct contact.

DO NOT leave the operator's seat if any part of the equipment contacts electric lines or cables.

Detach Brush Mulcher Safely

Detach brush mulcher on a firm and level surface. Brush mulcher may fall over if detached on sloping or soft surface. Be sure people, livestock and pets are clear of machinery.

Raised Attachment

WARNING

Crushing hazard.

Raised, unsupported brush mulcher can fall, resulting in death or serious injury.

Never enter the area under a raised brush mulcher.

A raised brush mulcher can lower unexpectedly, resulting in death or serious injury.

NEVER enter area under a raised brush mulcher.

Lower brush mulcher to ground, engage parking brake, shut off engine and remove key before servicing.

Avoid Loud Noise

WARNING

Prolonged exposure to loud noise can cause impairment or loss of hearing.

Wear a suitable hearing protective device such as earmuffs or earplugs to protect against objectionable or uncomfortable loud noises.

Hazards From Modifying Equipment

Do not make any alterations to your brush mulcher. Altering the equipment may cause unsafe conditions and may void the manufacturer's warranty.

Stay Clear Of Rotating Driveshaft

WARNING

Entanglement in a rotating driveshaft can cause serious injury or death.

Keep tractor shields and driveshaft shields in place at all times. DO NOT operate without driveshaft guards.

DO NOT wear loose fitting clothing.

Avoid Wood Dust Inhalation

WARNING

Drilling, sawing, sanding or machining wood products can expose you to wood dust, a substance known to the State of California to cause cancer.

Avoid inhaling wood dust or use a dust mask or other safeguards for personal protection. For more information go to www.P65Warnings.ca.gov/wood.

WARNING

Wear an approved dust mask or respirator.

Follow local, state and federal regulations.

2.3 Maintenance Hazards

Before servicing, park machine on a firm and level surface, set parking brake, chock wheels, and place a “Do Not Operate” tag on control panel. Read and understand this manual. If you do not understand any part of the manual, contact your Baumalight dealer.

Always wear face and/or eye protection, safety shoes, and other protective equipment appropriate for the job.

Do not make unauthorized modifications. Contact your Baumalight dealer before you weld, cut/drill holes, or make any other modifications.

WARNING

Moving parts can crush and cut.

Keep clear of moving components.

Follow lockout procedure before servicing.

WARNING

Crushing hazard.

Before performing inspections, service or maintenance:

Park machine on firm, level surface.

Engage parking brake.

Turn engine off and remove key.

Place “Do Not Operate” tag on control panel.

WARNING

Entanglement hazard.

Keep clear of moving components.

Wear proper protective equipment appropriate for the job.

WARNING

Burn hazard.

Hot and high pressure hydraulic oil.

Allow oil to cool before servicing.

3 SAFETY SIGNS

Dashed line indicates item hidden from view unless cover is removed.

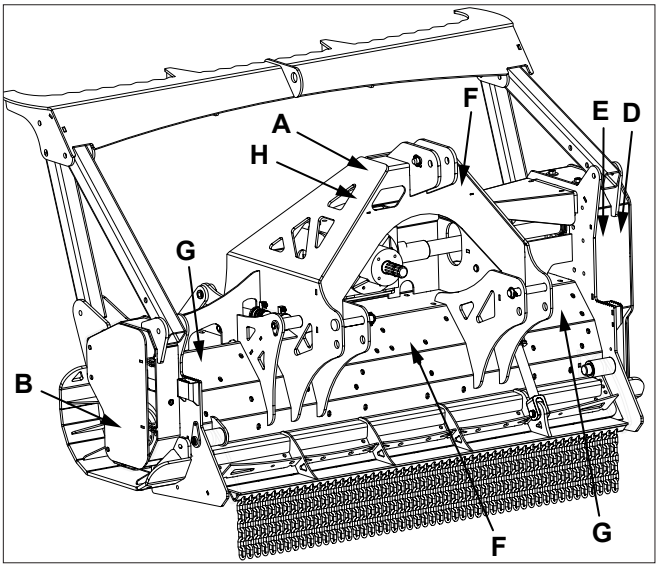

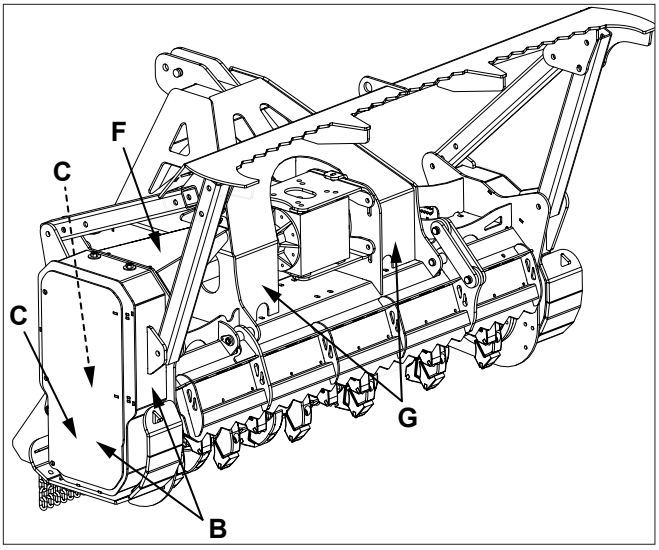

A. D005262 ⚠ WARNING - P65 warning information.

> ⚠ **WARNING:** This product can expose you to chemicals including 1,3-Butadiene and lead, which are known to the state of California to cause cancer and birth defects or other reproductive harm. For more information go to www.P65Warnings.ca.gov.
>
> D005262

B. D005255 ⚠ WARNING - Rotating blade hazard. Keep back 75 m while machine is operating. Wait for blade to stop before approaching machine.

C. D005120 ⚠ WARNING - Rotating parts hazard. Do not reach into machine. Keep away from machine.

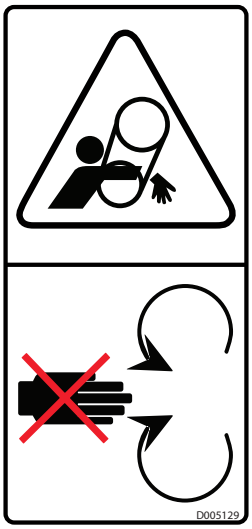

D. D005521 ⚠ WARNING - Remove key before servicing.

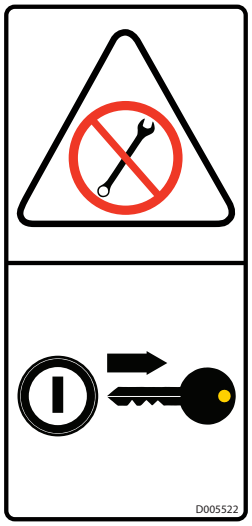

E. D005252 ⚠ WARNING - Read and understand safety signs on the machine and operating instructions in this manual before operating machine.

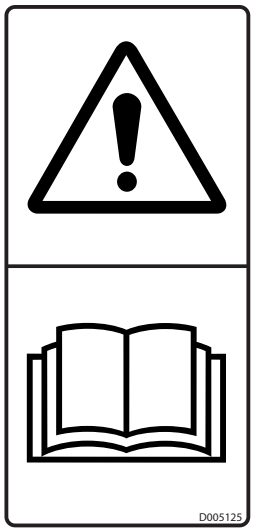

F. D005336 ⚠ WARNING - Rotating driveshaft. Entanglement hazard. Keep away from driveshaft while it is rotating.

G. D005254 ⚠ WARNING - Pinch point / crush hazard. Do not reach into machine. Keep away from machine.

H. D005253 ⚠ WARNING - Pressurized fluid hazard. Pressurized fluids can penetrate the skin. Do not check for leaks with your hands. Keep back a safe distance when pressurized.

The two and four panel safety decals are pictorial and have a yellow background. The panel with a triangle indicates the potential hazard. The panel without a triangle indicates how to avoid the hazard.

If any of the decals are missing, are damaged, or if you do not understand the decal, please contact your dealer.

4 OPERATION

4.1 Preparation For Use

WARNING

Drilling, sawing, sanding or machining wood products can expose you to wood dust, a substance known to the State of California to cause cancer.

Avoid inhaling wood dust or use a dust mask or other safeguards for personal protection. For more information go to www.P65Warnings.ca.gov/wood.

WARNING

Wear an approved dust mask or respirator.

Follow local, state and federal regulations.

Although the brush mulcher has been carefully inspected and checked prior to shipment from manufacturer, it is recommended that the unit be thoroughly inspected.

Check all bolts for tightness and remove all shipping tags, bags, skids, and blocking.

Review and understand this manual and operating unit manual.

Remove any masking materials affixed during painting. Inspect the tractor and any accessory equipment to verify that nameplates and all safety warning, caution signs and decals provided with the equipment are in place and clearly visible.

Visually inspect the unit before each start up. Check for loose or missing parts and any damage that may have occurred during moving or shipping.

Review all tractor pre-start instructions, and be sure that all recommended steps and procedures have been followed.

4.2 Driveshaft Dimension

A PTO driveshaft is supplied with the machine. To accompany the variety of 3 point hitch geometry available today, the driveshaft can be too long for most machines or too short for others. It is very important that the driveshaft be free to telescope but not to bottom out when going through its working range. If the driveshaft bottoms out, the bearings on both the machine and tractor PTO shaft will be overloaded and fail in a short time.

1. To determine the proper length of the driveshaft, follow this procedure:
   a. Clear the area of all bystanders.
   b. Attach brush mulcher to tractor (see section 4.5) but do not attach driveshaft.
   c. Raise mulcher until the input shaft is level with tractor PTO shaft.
   d. Measure dimension between locking grooves on tractor PTO shaft and machine input shaft.
   e. Measure the same dimensions on the compressed driveshaft.
   f. If compressed driveshaft dimension exceeds the machine dimension, driveshaft will have to be cut.
2. When cutting the driveshaft, follow this procedure:
   a. Subtract machine dimension (A) from uncut driveshaft dimension (B) or (B-A). This dimension determines how much too long the driveshaft is.
   b. Add another 1 inch (25 mm) to the dimension to be sure it doesn't bottom out, to determine (C) the cut off dimension.
   c. Use a hacksaw to cut dimension (C) from both ends. Cut both plastic tubes and metal cores.
   d. Use a file to remove burrs from edges that were cut.
   e. Assemble the 2 ends of the shaft.

f. Make sure shaft can telescope freely. If it does not, separate the 2 parts and inspect for burrs or cuttings on shaft ends. Be sure it telescopes freely before installing.

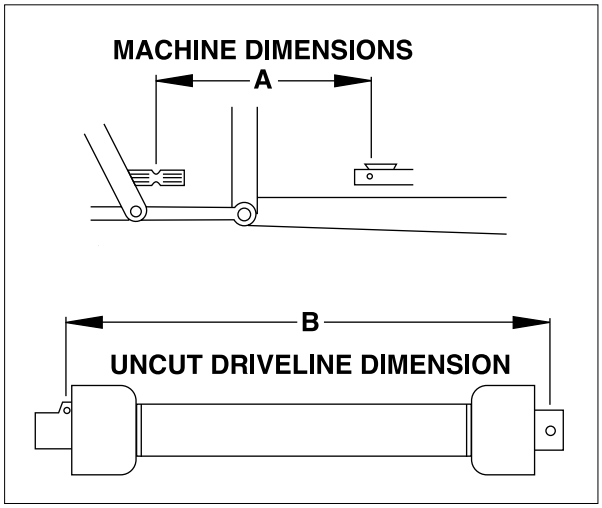

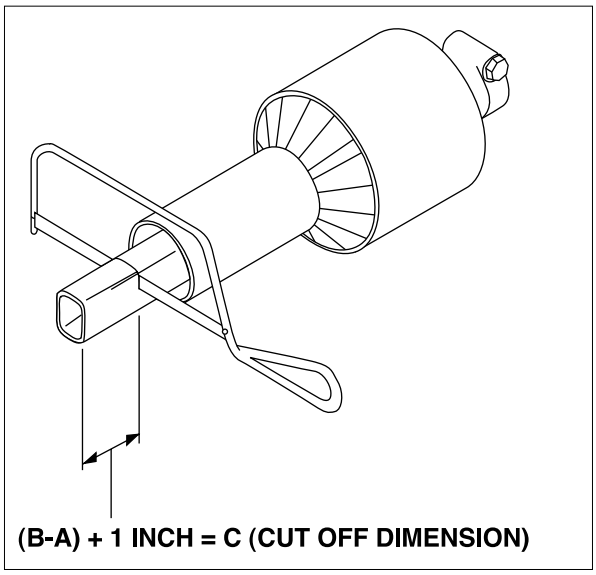

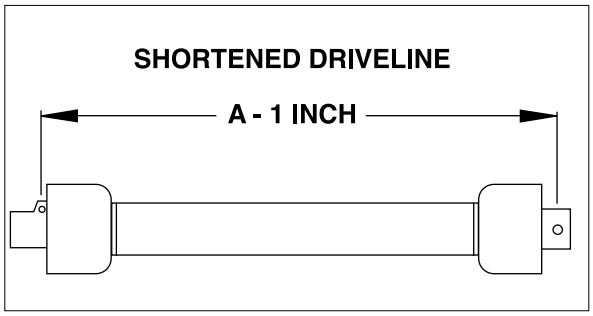

4.3 Pre-Operation Check List

Check-mark	Check these items:	Frequency
	Check the three linch pins on the hitch to verify they are securely fastened.	Each operation.
	Verify the pins on each end of the drive shaft are secured.	Each operation.
	Verify the safety chains on the drive shaft are securely attached to the cover.	Each operation.
	Verify the cutting tips on the rotor are tight.	Every 4 hours.
	Check belt chamber.	Every 4 hours.
	Check the oil in the brush mulcher's gearbox. For type and quantity refer to the maintenance section.	Every 200 hours.

4.4 Machine Components

A. Brush Push Bar

B. 3-Point Top Link

C. 3-Point Lift Points

D. Gear Box

E. Cutting Teeth

F. Rotor

G. Debris Guard

H. Cutting Shield

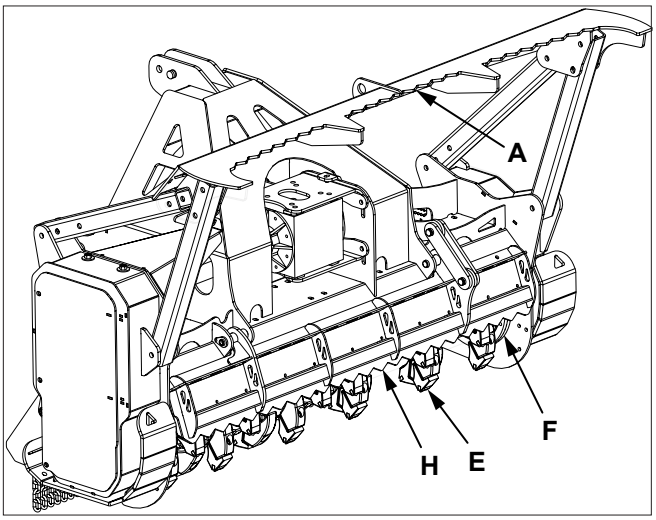

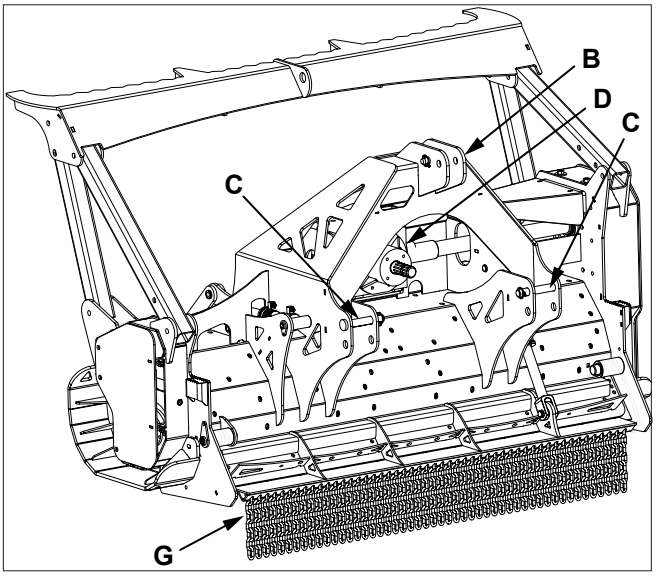

4.5 Attach Brush Mulcher

WARNING

To prevent injury or machine damage put transmission in "Park" and check the full range of hitch for interference, binding or PTO separation.

Never position yourself between tractor and brush mulcher.

Only experienced and properly trained operator's should operate the tractor and brush mulcher.

1. Back up tractor to brush mulcher with hitch points approximately in alignment.
2. Engage tractor park brake and/or place transmission in "Park".
3. Shut off engine and remove key.
4. Attach lower links to mulcher and retain using linch pins. To avoid machine damage, verify linch pins are locked on lower links.
5. Align top link with hole in top of frame and retain with pin and linch pin. Verify linch pin is locked on pin.
6. Pull PTO collar back toward the mulcher. Align splines on tractor PTO shaft and driveshaft by rotating mulcher driveshaft. Push driveshaft onto PTO shaft until it snaps into place.
7. Pull back on driveshaft to make sure it is locked on shaft.
8. Attach safety shield chain.
9. Adjust top link so that the brush mulcher lower frame is vertical to the ground.

Note: *Always keep the weight of the machine in mind. Never position body in line of impact.*

4.6 Detach Brush Mulcher

WARNING

Prevent serious injury or death caused by unexpected movement:

1. **Park tractor on a level surface.**
2. **Engage tractor park brake.**
3. **Disengage PTO.**
4. **Shut off engine and remove key.**

1. Park tractor on a level surface.
2. Lower mulcher to the ground.
3. Shut off engine and remove key.
4. Disconnect driveshaft safety chain.
5. Support driveshaft with your hand.
6. Pull collar back toward mulcher and slide off shaft.
7. Remove linch pin and pin.
8. Place top link in storage position.
9. Remove linch pins and pins from both lower links.

4.7 Transporting

1. Verify all reflectors and Slow Moving Vehicle (SMV) sign are visible.
2. Raise brush mulcher to fully raised position.
3. Verify tractor PTO is disengaged.
4. Travel at a reaonable and safe speed.

WARNING

To prevent bodily injury from rotating cutting wheel, be sure to disengage PTO before transporting mulcher.

4.8 Carbide Teeth Break-In

During the first few hours of use, avoid hitting stones as much as possible to allow the carbide teeth (A) to wear slightly. This can be done by keeping the cutting wheel above ground level.

Brand new carbide tips are razor sharp and can chip and shatter easily when they hit hard objects. Once the razor sharpness has worn away, the tips do not chip as easily.

Observing these precautions will extend the life of the carbide teeth and reduce operating expenses.

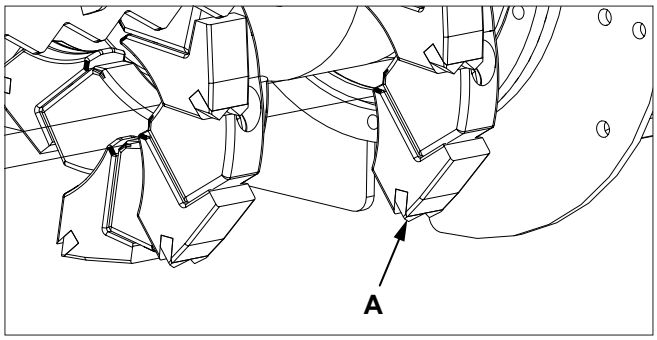

4.9 First Time User Tips

- First, operate all functions in a clear area with the tractor at idle speed to get a good feel for the controls before you actually move into any brush.
- Choose low density brush and move into it slowly, do not expect to get the first area done fast.
- Slow travel speed if pressure surges up close to max psi, doing this will greatly reduce rotor jambs, and with practice, will almost eliminate jambs.
- Run throttle only at half speed for starters, this will ensure that you do not activate the slip clutch.
- If the slip clutch does activate cool it to normal temperature before resuming operation (with water). A hot clutch will never grip and melts down fast.
- Operate with mulcher slightly raised until you have a better feel how much the unit can take.
- The machine is equipped with a push bar to push brush or small trees over and allow the mulcher teeth to contact the lower portion of the brush and mulch it or cut it off. The rest of the plant will be mulched as the machine moves through the working area.
- For tall brush, you can use the push bar to push the brush over and cut it off close to ground. You can also raise the mulcher, start mulching the top and then lower to the ground. Raise machine, move forward and repeat. Each operator must experiment to find a technique that works for them in their application.
- Although it is best to mulch when it is dry, the machine works well in wet conditions. However, you must travel slower to do the same quality mulching. It will also be necessary to clean the machine more frequently to prevent caking and clogging of the rotor area.

WARNING

Always turn off the tractor and disengage the PTO drive before getting off the seat and approaching the cutting wheel.

WARNING

Drilling, sawing, sanding or machining wood products can expose you to wood dust, a substance known to the State of California to cause cancer.

Avoid inhaling wood dust or use a dust mask or other safeguards for personal protection. For more information go to www.P65Warnings.ca.gov/wood.

WARNING

Wear an approved dust mask or respirator.

Follow local, state and federal regulations.

4.10 Field Operation

WARNING

Entanglement in a rotating driveshaft can cause serious injury or death.

Keep tractor shields and driveshaft shields in place at all times. DO NOT operate without driveshaft guards.

DO NOT wear loose fitting clothing.

Never approach brush mulcher before cutting wheel has come to a complete stop.

WARNING

Prevent serious injury or death caused by unexpected movement:

1. **Park tractor on a level surface.**
2. **Engage tractor park brake.**
3. **Disengage PTO.**
4. **Shut off engine and remove key.**

WARNING

Never operate brush mulcher when other people are in the vicinity.

Do not allow riders on tractor.

WARNING

Drilling, sawing, sanding or machining wood products can expose you to wood dust, a substance known to the State of California to cause cancer.

Avoid inhaling wood dust or use a dust mask or other safeguards for personal protection. For more information go to www.P65Warnings.ca.gov/wood.

WARNING

Wear an approved dust mask or respirator.

Follow local, state and federal regulations.

WARNING

Never operate brush mulcher when other people are in the vicinity. Debris can be thrown several feet from cutting area. Keep all shields in place.

1. Attach mulcher to tractor. See Attaching Brush Mulcher To Tractor in this section.

WARNING

Prevent serious injury or death.

Operating unit must be equipped with a forestry guard to protect the operator.

2. Lower mulcher so skid plates are on ground.
3. Set engine speed to low idle and engage mulcher.
4. Slowly increase engine speed to high idle. Verify mulcher is operating smoothly and start travel.
5. If mulcher stalls, stop movement, slightly raise mulcher and allow rotor to regain speed. Slow ground speed to prevent further stalling.

WARNING

Moving parts can crush and cut.

Keep clear of moving components.

Lockout operating unit before clearing jams.

5 SERVICE AND MAINTENANCE

5.1 Maintenance

Maintenance Chart		
General Inspection	Inspect the unit for any buildup of contamination (dirt, stones, etc.).	Daily
Cutting Teeth	Check and replace one at a time as necessary. With daily use expect to replace 4 to 6 teeth per day. See Replace Cutting Teeth in this section.	Every 4 hours.
Drive Belt	Check belt tension, alignment and inspect belt for wear or damage. Replace damaged or worn belt.	Every Week.
Rotor Bearings	Check bearings for side-to-side and up/down movement. Replace bearings if movement is found.	Every Week.
Rotor Bearings	Lubricate rotor bearings.	Every 500-1000 hours.
Gearbox Oil	Change gear box oil. Use synthetic 90W gear oil. Capacity is 1.5 qt (1.5 L).	Every 2000 hours.

We design many of our products using industry-standard parts that are widely available from local supply stores.

Many replacement parts such as bearings, belts, seals, touch-up paint and cutting teeth can often be found through local suppliers, not just from Baumalight.

5.2 Inspections

WARNING

Prevent serious injury or death caused by unexpected movement:

1. **Park tractor on a level surface.**
2. **Engage tractor park brake.**
3. **Disengage PTO.**
4. **Shut off engine and remove key.**

WARNING

Drilling, sawing, sanding or machining wood products can expose you to wood dust, a substance known to the State of California to cause cancer.

Avoid inhaling wood dust or use a dust mask or other safeguards for personal protection. For more information go to www.P65Warnings.ca.gov/wood.

WARNING

Wear an approved dust mask or respirator.

Follow local, state and federal regulations.

Inspect the unit for any buildup of contamination (dirt, stones, etc.).

Check cutting teeth every 4 hours of use. Keep cutting teeth in good condition. Unit will cut faster and remaining teeth will last longer if broken teeth are replaced.

5.3 Check Belt Tension

1. Lower mulcher to ground.
2. Set parking brake, stop engine and remove key.

⚠ WARNING

Moving parts can crush and cut.

Keep clear of moving components.

Follow lockout procedure before servicing.

3. Open inspection cover (A).

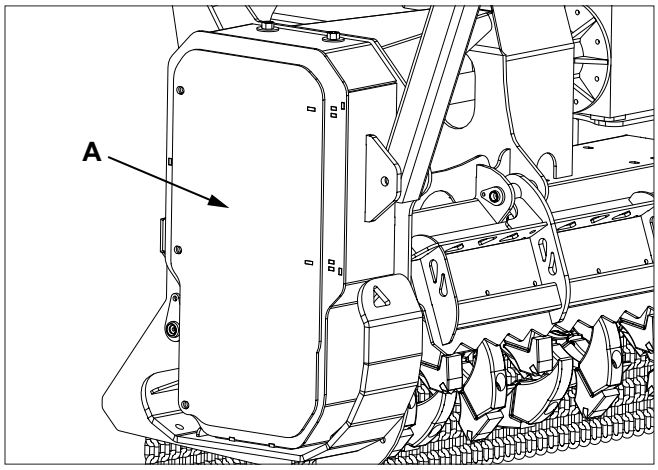

4. Inspect belt (B) for wear, damage, alignment and proper tension.
5. To adjust belt tension, loosen mounting bolts (C).
6. Turn bolts (D) to adjust belt tension.
7. Belt deflection should be 0.5 in. (13 mm) at 3.0 lbs of force for a used belt or 4.25 lbs of force for a new belt.
8. Tighten mounting bolts (C).
9. Place a straight edge on drive pulley and rotor pulley. Pulleys must be aligned or belt will wear quickly. Adjust pulleys if necessary.
10. Close inspection cover (A). Do not operate mulcher with cover (A) open or removed.

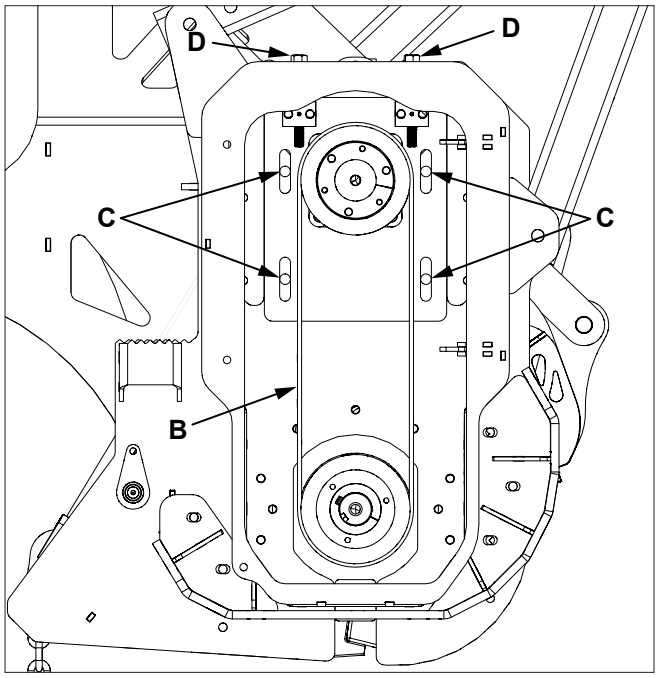

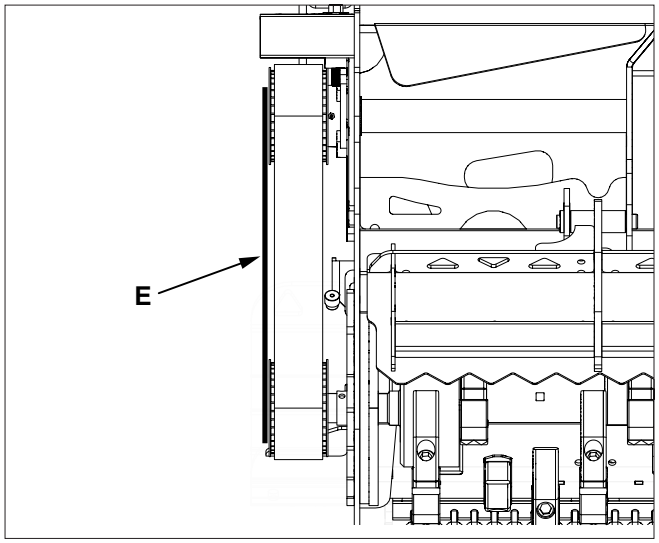

5.4 Replace Belt

1. Lower mulcher to ground.
2. Set parking brake, stop engine and remove key.

WARNING

Moving parts can crush and cut.

Keep clear of moving components.

Follow lockout procedure before servicing.

3. Open inspection cover (A).

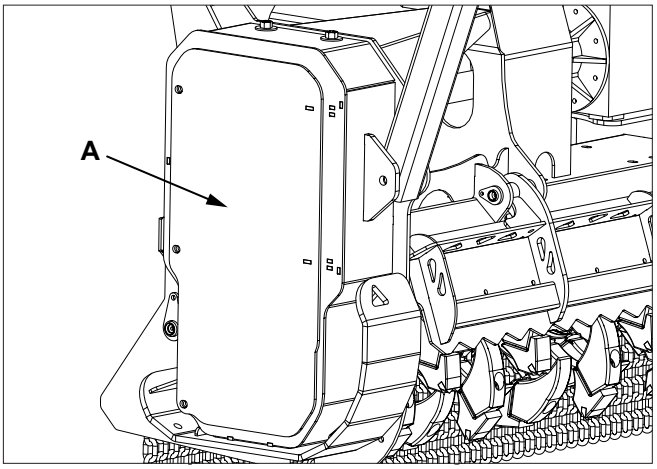

4. Loosen mounting bolts (B). Turn bolts (C) to loosen belt.
5. Remove shaft pulley bolt and washer (D).
6. Remove three hub bolts from hub (E). Place hub bolts into threaded holes (F) in hub (E).
7. Evenly tighten bolts to push pulley (G) off of hub (E).
8. Remove hub (E), pulley (G) and belt (H). It may be necessary to lightly tap hub if hub stuck to shaft.
9. Install belt (H), pulley and hub onto shaft.
10. Install washer (D) and shaft bolt. Tighten bolt.
11. Align pulley holes with non threaded holes in hub (E) and install bolts.
12. Place a straight edge on drive pulley and rotor pulley. Pulleys must be aligned or belt will wear quickly. Adjust pulley alignment as necessary and tighten hub bolts.
13. Belt deflection (I) should be 0.5 in. (13 mm) at 4.25 lbs of force.
14. Adjust tension with bolts (C) and tighten mounting bolts (B).
15. Close inspection cover (A). Do not operate mulcher with cover (A) open or removed.

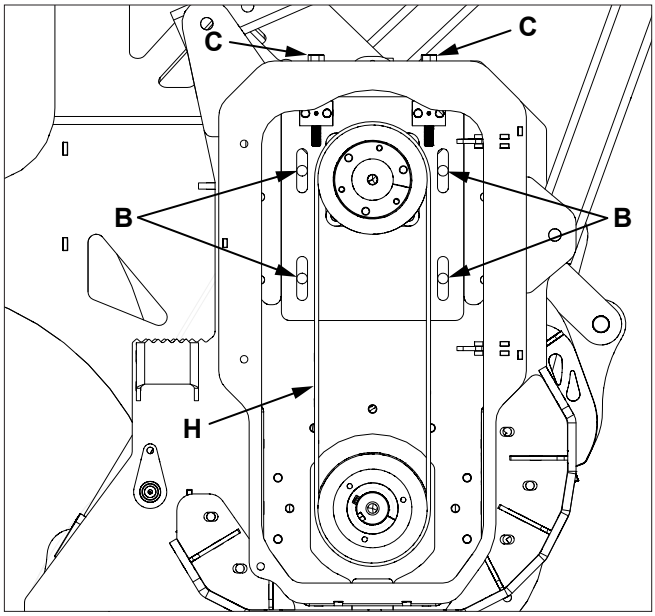

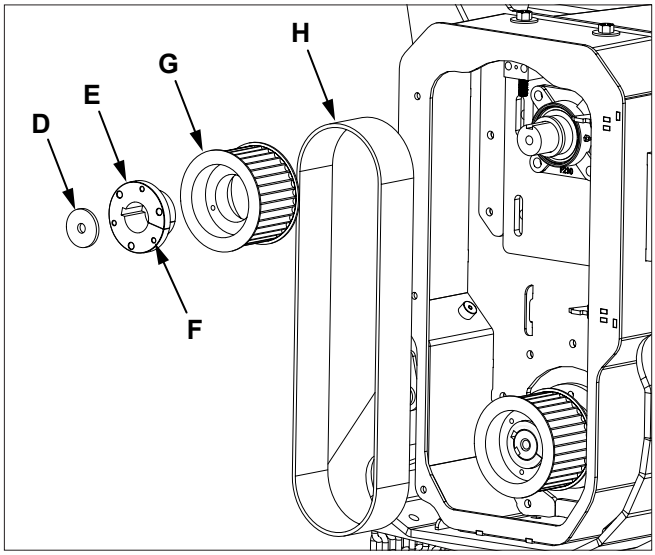

5.5 Adjust Slip Clutch

WARNING

Entanglement in a rotating driveshaft can cause serious injury or death.

Disconnect and lockout power source before adjusting or servicing.

CAUTION

Slip clutch may be hot. Wait for clutch to cool before adjusting or servicing.

Bondioli Driveshafts

4-Disc 120 Hp 1,000 rpm
- OEM Part Number
  - 71R8121UCKR80V6
- Dimension A - 0.236 in. (6 mm)
- Dimension B - 1.12 in. (28.5 mm)

4-Disc 165 Hp 1,000 rpm
- OEM Part Number
  - CSHN086U2R100W8
- Dimension A - 0.275 in. (7 mm)
- Dimension B - 1.14 in. (29 mm)

Binacchi Drivehafts

2-Disc 68 Hp 540 rpm
- OEM Part Number
  - B6140EA60255
  - B6N121USA60255
- Dimension A - 0.236 in. (6 mm)
- Dimension B - 1.1 in. (28 mm)

4-Disc 80 Hp 540 rpm
- OEM Part Number
  - B8N111USA60307
  - B8#140EA60307
- Dimension A - 0.275 in. (7 mm)
- Dimension B - 1.15 in. (29 mm)

Benzi Driveshafts

4-Disc 123 Hp 540 rpm 6 spline both ends
- Baumalight Part Number - D005536
- OEM Part Numbers
  - V1003286
  - Friction Clutch - F4T0938200C
- Dimension A - 0.275 in. (7 mm)
- Dimension B - 1.22 in. (31 mm)

4-Disc 136 Hp 1000 rpm, 21-20 spline
- Baumalight Part Number - D005537
- OEM Part Numbers
  - CV803290
  - Friction Clutch - F4B0820180C
- Dimension A - 0.275 in. (7 mm)
- Dimension B - 1.22 in. (31 mm)

4-Disc 200 Hp 1000 rpm, 20-20 spline
- Baumalight Part Number - D002134
- OEM Part Numbers
  - V1005134
  - Friction Clutch - F4T0920240C
- Dimension A - 0.275 in. (7 mm)
- Dimension B - 1.20 in. (30.5 mm)

4-Disc 190 Hp 1000 rpm, 21-20 spline
- Baumalight Part Number - D007975
- OEM Part Numbers
  - V1005364
  - Friction Clutch - F4T0920240C
- Dimension A - 0.275 in. (7 mm)
- Dimension B - 1.20 in. (30.5 mm)

Eurocardan Driveshafts

4-Disc 140 Hp 540 rpm, 6 spline both ends
- Baumalight Part Number - D008279
- OEM Part Numbers
  - YEP10 1280/1602
  - Friction Clutch - 146T028
- Dimension A - 0.24 in. (6 mm)
- Dimension B - 1.12 in. (28.5 mm)

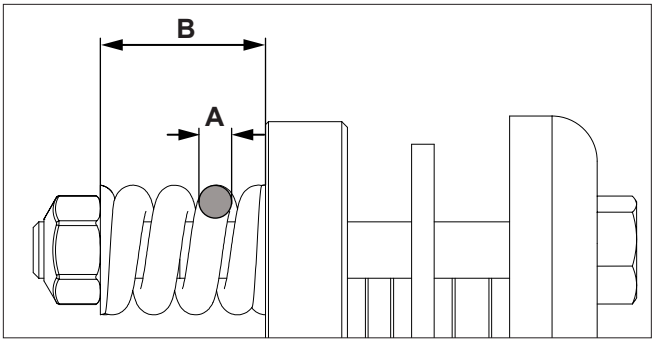
B
A

5.6 Lubricate Rotor Bearings

The bearings are factory lubricated with a lithium or lithium complex base grease which is suitable for most applications. Select a grease that is compatible with a lithium or lithium complex grease.

The bearings should contain as much grease as speed will permit. A full bearing with consequent slight leakage through the seal is the best protection against contaminant entry.

Extreme situations may require a change in lubricating periods as dictated by experience.

Generally, a lower quantity of grease at frequent intervals is more effective than a greater quantity at extended lubrication intervals.

Typical lubrication quantity is 1 pump from a standard grease gun every 500-1000 hours of use.

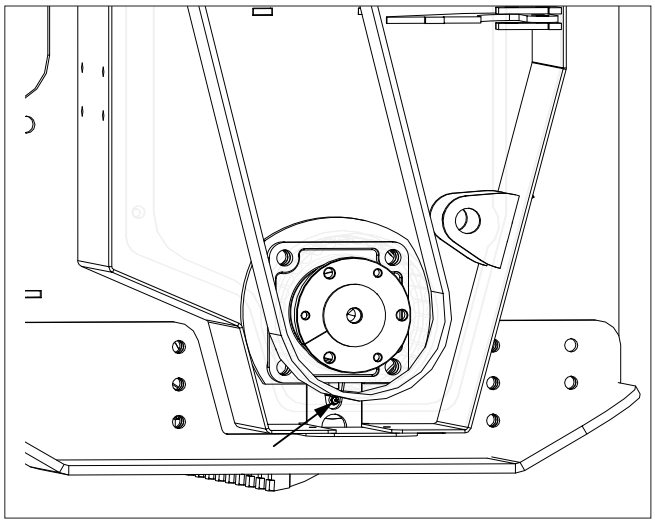

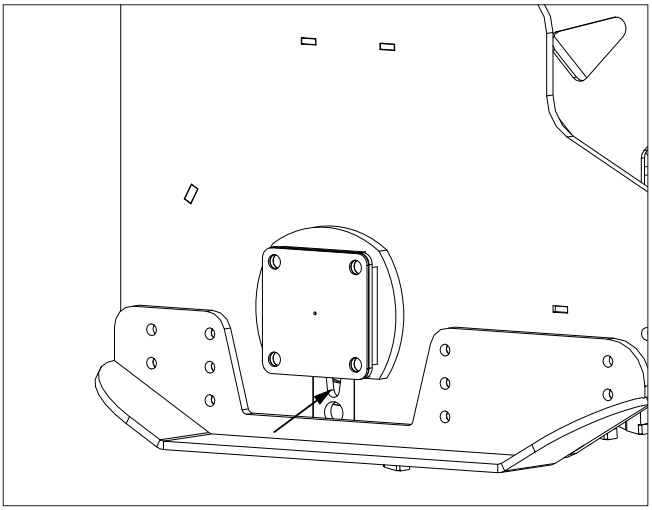

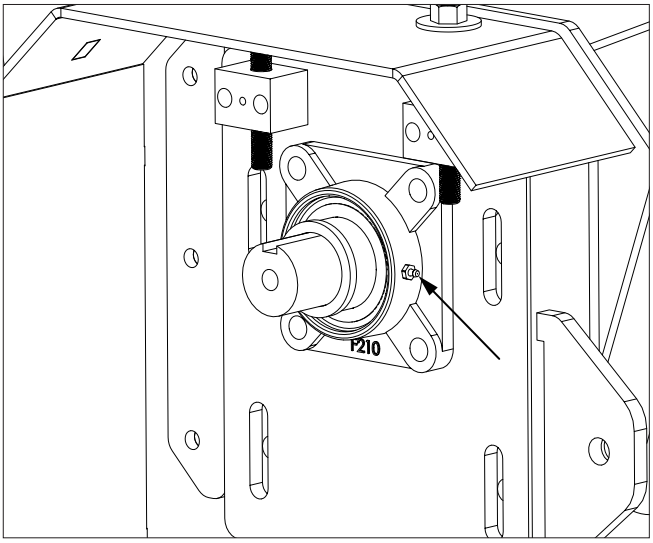

In the higher speed ranges, too much grease will cause overheating. The amount of grease that the bearing will take for a particular high speed application can be determined only by experience.

If excess grease in the bearing caused overheating, it will be necessary to remove grease fitting to permit excess grease to escape.

5.7 Replace Cutting Teeth

1. Park tractor and mulcher on a level surface.
2. Lower mulcher to the ground.
3. Shut off engine and remove key.
4. Inspect cutting teeth (A) for damage and wear. Replace individual teeth as needed.
5. Remove hex screw (B) and tooth (A).
6. Install new tooth.
7. Tighten socket head cap screw (B) to 170 lb/ft (231 Nm) of torque.

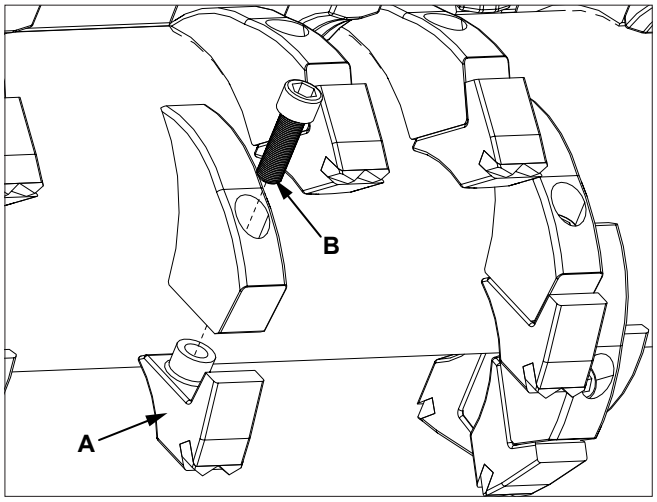

Note: *Parts breakdown can be found on Baumalight's website.* www.baumalight.com

5.8 Check Gearbox Oil Level

1. Park tractor and mulcher on a level surface.
2. Lower mulcher to the ground.
3. Shut off engine and remove key.
4. Remove plug (A). Oil level should be 2 in. (51 mm) below plug hole. Bend a piece of wire and insert into hole. Remove wire to check oil level. Add oil if low.
5. Install plug.
6. To change gearbox oil, remove plug (B) to drain oil. Dispose of used oil in an environmentally safe manner. Install plug (B) and fill gearbox through hole (A) until oil is 2 in. (51 mm) below plug hole (A).

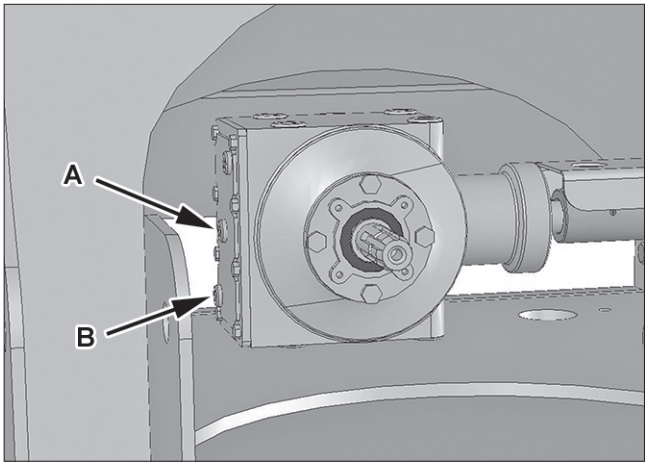

Note: *Parts breakdown can be found on Baumalight's website.* www.baumalight.com

6 TROUBLESHOOTING

PROBLEM	CHECK	SOLUTION
Rotor does not spin.	Rotor jammed.	Remove material from rotor.
	Verify PTO driveshaft is connected properly. Slip clutch is slipping.	Connect driveshaft to tractor. Remove material from rotor.
Rotor rotates slow or sluggish.	Drive belt loose. Slip clutch is slipping.	Tighten drive belt. 1. Check to determine if the slip clutch is hot. Use Caution: Clutch can be very hot! A hot clutch does NOT grip. 2. Slippage on the clutch occurs if there is more power than the unit is rated for: Model MP972 is rated for 115 - 125 hp input. A bigger tractor can be used if it is idled down. This will decrease the output power of the engine. 3. Travel slower to decrease strain on clutch. 4. Turn the flow control knob to a lower number (1) to reduce the strain on the slip clutch. Be careful when tightening the tension setting on the slip clutch as this could put excess strain on the gear box.
Tractor is not able to lift 3-point.	Tractor is too small.	Use proper size tractor.
Excessive vibration.	Cutting teeth worn or missing. Debris lodged in rotor.	Replace worn, broken or missing teeth. Remove debris.

7 STORAGE

7.1 Storing Mulcher

1. Store mulcher in a dry place.
2. Clean mulcher thoroughly. Dirt and wood chips will draw moisture and cause rust.
3. Check condition of cutting teeth. Replace as necessary. (See Service and Maintenance section.)
4. Check for loose or missing hardware.
5. Paint parts as necessary.
6. Store PTO driveshaft off the ground.
7. Refer to slip clutch manufacturers manual for storage procedures.

7.2 Removing Mulcher From Storage

1. Review operator's manual and check adjustments.
2. Check gear box oil level. Add oil as necessary. (See Service and Maintenance section.)
3. If parts have been replaced, verify they run properly.
4. Refer to slip clutch manufacturers manual for startup procedures.

7.2.1 Slip Clutch

WARNING

Entanglement in a rotating driveshaft can cause serious injury or death.

Disconnect and lockout power source before adjusting or servicing.

1. Disengage tractor PTO. Shut off engine and remove key.
2. Using a marker, scribe a line (A) across the exposed edges of the clutch plate and friction discs.
3. Loosen each compression nuts (B) exactly two revolutions to free clutch friction discs.

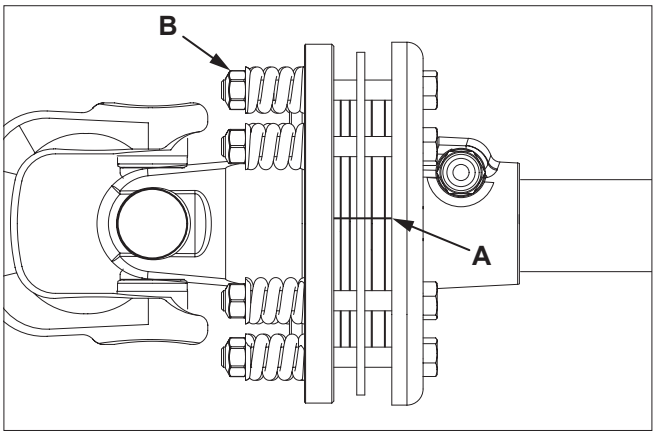

4. Start tractor and run driveshaft at a low idle to slip the friction discs. This will remove the dirt, corrosion and surface floss from clutch plate faces.
5. Disengage tractor PTO. Shut off engine and remove key.
6. Inspect the clutch and ensure that the scribed markings on the disc and plates have changed position. If any two marks are still aligned is an indication that these discs have not slipped. Repeat steps 4-5.
7. After ensuring all discs are free, tighten the compression nuts (B) uniformly, exactly two revolutions to resent the clutch to original pressure.

8 WARRANTY

To view the warranty, scan the QR Code below, or go to Baumalight.com. From the Support drop down, click on Support, then select Brush Mulchers. Select Product Warranty.

For parts, specifications and the latest machine information please visit our website.

www.baumalight.com

MTB MFG INC.
CORPORATE HEADQUARTERS
4575 Powell Rd.,
Wallenstein, Ontario Canada
N0B 2S0
www.baumalight.com