BAUMALIGHT™

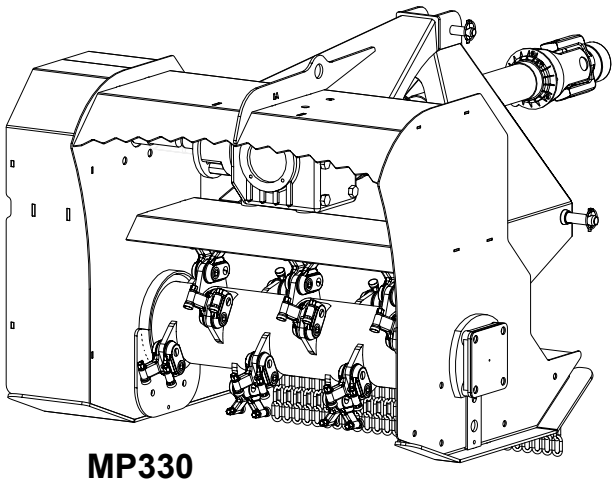

MP330

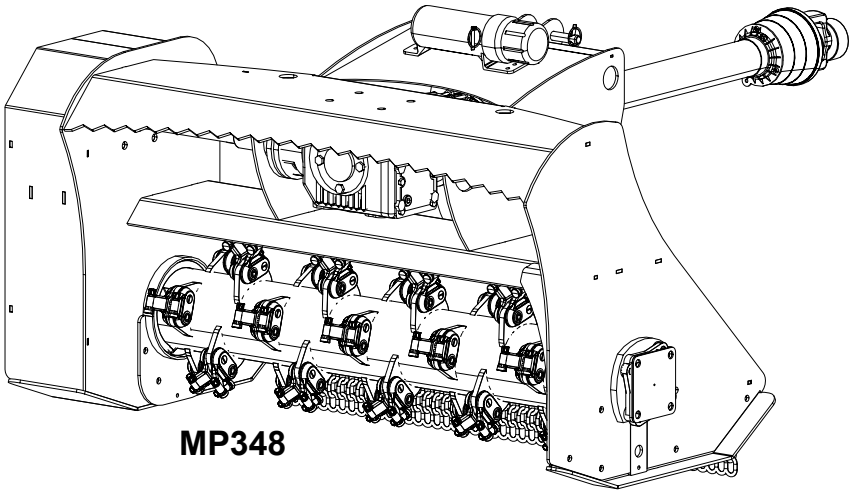

MP348

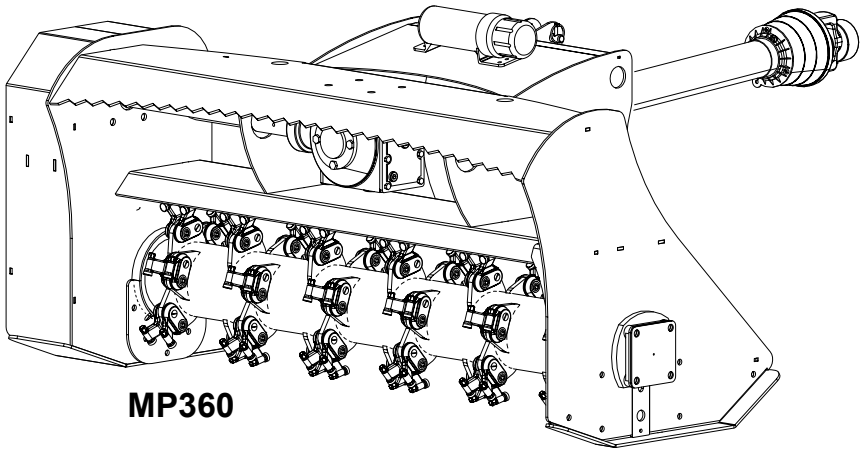

MP360

BAUMALIGHT™

# MP330, MP348 And MP360 Brush Mulcher

## OPERATOR'S MANUAL

Issue Date: October 2026

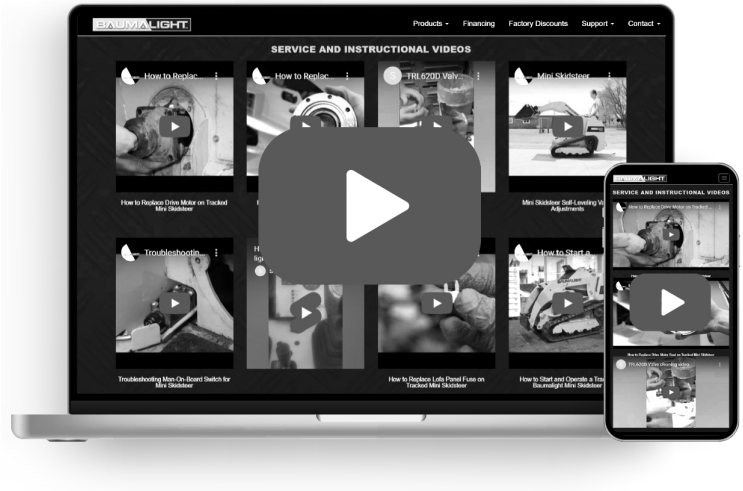


# Service And Instructional Videos

## Find online at baumalight.com/support

Following is a list of videos and documents available on Baumalight's website and also on YouTube to help and enhance maintaining the brush mulcher. The list below was current at the time this manual was issued. Additional content may be available.

| Activity ID Number | Activity Name | Description | Item Available |
|---|---|---|---|
| 22 | Belt Maintenance. | Install New Belt. | Video |
| 225 | Slip Clutch Information. | Burnt Clutch. | Document |
| 242 | PTO Shaft. | Determining PTO Shaft Length. | Video |
| 249 | Rotor Shaft. | Replacing Rotor Shaft. | Video |
| 189 | Replacing Teeth. | When To Replace H3000 Teeth. | Video |
| 155 | Rotor Bearing. | Replacing Rotor Bearing. | Video |
| 88 | Pressure Not Building Up. | Relief Over Tightened. | Document |
| 23 | Belt Maintenance. | Testing New Belt. | Video |
| 43 | Mulcher Drive Side Bearing Replacement. | Replace Bearing - Drive Side. | Document |
| 44 | Mulcher Bearing Replace Idler Side. | Replace Bearing - Idler Side. | Document |
| 45 | Torque Chart For Mulchers. | Mulcher Bolts Torque Chart. | Document |
| 48 | How To Replace A Jack Shaft On 300 & 500 Series MP Mulchers. | Replace Jackshaft On 300 And 500 Series MP Mulchers. | Document |
| 52 | Bending Idler Bracket Instruction. | Bending Idler Bracket To Control Where Belt Runs On Pulleys. | Document |
| 55 | Excessive Vibration. | Troubleshooting Excessive Vibration. | Video |
| 311 | Hydraulic Motor. | Breaking In Replacement Hydraulic Motor. | Video |
| 252 | Belt Maintenance. | Install New Belt. | Video |

| Activity ID Number | Activity Name | Description | Item Available |
|---|---|---|---|
| 464 | Communicating Measurements. | Why Not To Send Pictures Of Measuring Tapes To Communicate Measurements. | Video |
| | | | |
| | | | |
| | | | |
| | | | |
| | | | |
| | | | |
| | | | |
| | | | |
| | | | |
| | | | |
| | | | |
| | | | |
| | | | |
| | | | |
| | | | |
| | | | |
| | | | |
| | | | |
| | | | |
| | | | |
| | | | |
| | | | |
| | | | |
| | | | |
| | | | |
| | | | |
| | | | |
| | | | |
| | | | |
| | | | |
| | | | |

# TABLE OF CONTENTS


1 INTRODUCTION ..... 5
1.1 Overview ..... 5
1.2 Intended Use And Foreseeable Misuse ..... 6
2 SAFETY ..... 7
2.1 Safety Alert Symbol And Safety Words ..... 7
2.2 Operational Hazards ..... 8
Prepare For Emergencies ..... 9
Replace Safety Signs ..... 9
Do Not Allow Riders ..... 9
Lower Operating Speed ..... 9
Avoid Rollover ..... 9
Avoid Powerlines & Underground Utilities ..... 9
Detach Brush Mulcher Safely ..... 9
Hazards From Modifying Equipment ..... 10
2.3 Maintenance Hazards ..... 11
Maintenance ..... 11
3 SAFETY SIGNS ..... 12
3.1 MP348 And MP360 ..... 12
3.2 MP330 ..... 14
4 OPERATION ..... 16
4.1 Preparation For Use ..... 16
4.2 Driveshaft Dimension ..... 16
4.3 Pre-Operation Check List ..... 18
4.4 Machine Components ..... 18
4.5 Attach Brush Mulcher ..... 19
4.6 Detach Brush Mulcher ..... 19
4.7 Transporting ..... 20
4.8 Carbide Teeth Break-In ..... 20
4.9 First Time User Tips ..... 20
4.10 Field Operation ..... 22
5 SERVICE AND MAINTENANCE ..... 24
5.1 Maintenance ..... 24
5.2 Inspections ..... 25
5.3 Check Belt Tension ..... 26
5.4 Replace Belt ..... 27
5.5 Adjust Slip Clutch ..... 28
5.6 Replace Cutting Teeth ..... 29
5.7 Rotate Cutting Teeth ..... 29
5.8 Replace Tooth Holder ..... 30
5.9 Check Gearbox Oil Level ..... 30
5.10 Rotor Bearings ..... 31
6 TROUBLESHOOTING ..... 32
7 STORAGE ..... 33
7.1 Storing Mulcher ..... 33
7.2 Removing Mulcher From Storage ..... 33
8 WARRANTY ..... 34

# 1 INTRODUCTION

## 1.1 Overview

Congratulations on your choice of a Baumalight Brush Mulcher to complement your mulching operation. This equipment has been designed and manufactured to meet the needs of a discriminating buyer.

The cutting wheel is powered by the PTO on your tractor.

Replaceable bearings are provided at major pivot points for extended service life.

Safe, efficient and trouble free operation of your brush mulcher requires that you and anyone else who will be operating or maintaining the brush mulcher, read and understand the Safety, Operation, Maintenance and Troubleshooting information contained within the Operator's Manual.

This manual covers the MP330, MP348 and MP360 Baumalight Brush Mulchers. Use the Table of Contents as a guide to locate required information.

Keep this manual handy for frequent reference and to pass on to new operators or owners. Contact your Baumalight dealer if you need assistance, information or additional copies of the manuals.

When this machine is worn out and no longer in use, it should be returned to the retailer or other party for recycling.

OPERATOR ORIENTATION - The directions left, right, front and rear, as mentioned throughout this manual, are as seen from the tractor driver's seat and facing in the direction of travel.

## 1.2 Intended Use And Foreseeable Misuse

The brush mulcher is designed to be used by experienced operators, trained in the safe operation of a tractor and trained in the hazards related to using the brush mulcher and the safe use of the mulcher for the intended purpose. Operators will require personal protective equipment to reduce the risk from some hazards that cannot be completely eliminated or controlled by the design of the tool.

Care is required to ensure that the brush mulcher tool will not come across metallic objects, stones or other materials.

Brush mulcher tools are not designed for use in hazardous atmospheres where there is a risk of fire or explosion due to flammable gases or vapors. Use in hazardous, explosive atmospheres is prohibited.

Serious injury or death of the operator or bystanders may be caused if the tool is misused. Misuse may also cause damage to the machine carrying the implement.

# 2 SAFETY

## 2.1 Safety Alert Symbol And Safety Words

You must read, understand and follow the instructions given by the operating unit manufacturers, as well as the instructions in this manual.

The safety information in this manual is denoted by the safety alert symbol:

This symbol means ATTENTION! BECOME ALERT! YOUR SAFETY IS INVOLVED!

The level of risk is indicated by the following signal words:

**DANGER**

**DANGER - Indicates a hazardous situation, which, if not avoided, WILL result in death or serious injury.**

**WARNING**

**WARNING - Indicates a hazardous situation, which, if not avoided, could result in death or serious injury.**

**CAUTION**

**CAUTION - Indicates a hazardous situation, which, if not avoided, could result in minor or moderate injury.**

**NOTICE**

**NOTICE - Indicates a situation that could result in damage to the equipment or other property.**

## 2.2 Operational Hazards

**WARNING**

**Prevent serious injury or death.**

**Read and understand this manual before operating brush mulcher.**

**Always stop engine and remove key before leaving operators seat.**

**Never allow anyone near the brush mulcher during operation.**

**Travel at a safe speed.**

**WARNING**

**Prevent serious injury or death from moving parts.**

**Moving parts can crush and dismember.**

**Do not operate without guards and shields in place.**

**Disconnect and lock out power source before adjusting or servicing.**

**WARNING**

**Use brush mulcher only for the designed applications.**

**Any other use may result in personal injury, damage to equipment and may void the warranty.**

**WARNING**

**Prevent serious injury or death.**

**Verify brush mulcher is attached to tractor before operation or transport.**

**WARNING**

**Protect from flying debris.**

**Wear proper safety glasses, goggles, or a face shield to protect from flying debris.**

Carefully read all safety messages in this manual and on equipment safety signs. Keep safety signs in good condition and replace missing or damaged safety signs.

New equipment components and repair parts must include the current safety decal.

Learn how to properly operate equipment. NEVER operate or work around this equipment without proper instruction, while fatigued or under the influence of alcohol, prescription or non-prescription medication or if feeling ill.

Keep your equipment in proper working condition.

Know the regulations and laws that apply to you and your industry. This manual is not to replace any regulations or laws. Additional information may be found at: www.asae.org or www.osha.gov.

If you do not understand any part of this manual, contact your Baumalight dealer.

## Prepare For Emergencies

- Be prepared in case of emergencies.
- Keep a fire extinguisher and first aid kit close to the machine.
- Keep emergency phone numbers close to your phone.
- Know your address so emergency services can locate you if an emergency arises.

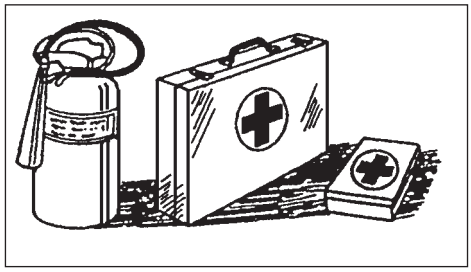

## Replace Safety Signs

- Replace missing or damaged safety signs.
- Safety signs are identified in Section 3 of this manual.
- Replacement safety signs are available from your Baumalight dealer.

## Do Not Allow Riders

- NEVER lift or carry anyone with brush mulcher.
- NEVER use brush mulcher as a work platform.
- NEVER allow passengers on brush mulcher.

## Lower Operating Speed

- Lower operating speed while loading, unloading or performing heavy operations.
- Keep load low and move at slow speeds on rough or uneven terrain.

## Avoid Rollover

The equipment may rollover, resulting in death or serious injury. To help prevent rollover:

- Travel at a slow speed.
- Avoid sharp turns & sudden movement on slopes.
- Carry loads close to the ground.
- Avoid holes, ditches and other obstructions which may cause equipment to rollover.
- Balance load so weight is evenly distributed and load is stable.
- Use caution when operating on slopes and do not operate on excessively steep slopes.
- Do not exceed load capacity of equipment.

## Avoid Powerlines & Underground Utilities

**⚠ DANGER**

**Prevent electrocution.**

**Death or serious injury can result if equipment comes near or contacts power lines.**

**Electrocution can occur without direct contact.**

DO NOT leave the operator's seat if any part of the equipment contacts electric lines or cables.

## Detach Brush Mulcher Safely

Detach brush mulcher on a firm and level surface. Brush mulcher may fall over if detached on sloping or soft surface. Be sure people, livestock and pets are clear of machinery.

## Raised Attachment

**WARNING**

**Crushing hazard.**

**Raised, unsupported brush mulcher can fall, resulting in death or serious injury.**

**Never enter the area under a raised brush mulcher.**

A raised brush mulcher can lower unexpectedly, resulting in death or serious injury.

NEVER enter area under a raised brush mulcher.

Lower brush mulcher to ground, engage parking brake, shut off engine and remove key before servicing.

## Avoid Loud Noise

**WARNING**

**Prolonged exposure to loud noise can cause impairment or loss of hearing.**

**Wear a suitable hearing protective device such as earmuffs or earplugs to protect against objectionable or uncomfortable loud noises.**

## Hazards From Modifying Equipment

Do not make any alterations to your brush mulcher. Altering the equipment may cause unsafe conditions and may void the manufacturer's warranty.

## Stay Clear Of Rotating Driveshaft

**WARNING**

**Entanglement in a rotating driveshaft can cause serious injury or death.**

**Keep tractor shields and driveshaft shields in place at all times. DO NOT operate without driveshaft guards.**

**DO NOT wear loose fitting clothing.**

## Avoid Wood Dust Inhalation

**WARNING**

**Drilling, sawing, sanding or machining wood products can expose you to wood dust, a substance known to the State of California to cause cancer.**

**Avoid inhaling wood dust or use a dust mask or other safeguards for personal protection. For more information go to www.P65Warnings.ca.gov/wood.**

**WARNING**

**Wear an approved dust mask or respirator.**

**Follow local, state and federal regulations.**

## 2.3 Maintenance Hazards

### Maintenance

Before servicing, park machine on a firm and level surface, set parking brake, chock wheels, and place a “Do Not Operate” tag on control panel. Read and understand this manual. If you do not understand any part of the manual, contact your Baumalight dealer.

Always wear face and/or eye protection, safety shoes, and other protective equipment appropriate for the job.

Do not make unauthorized modifications. Contact your Baumalight dealer before you weld, cut/drill holes, or make any other modifications.

**WARNING**

**Moving parts can crush and cut.**

**Keep clear of moving components.**

**Follow lockout procedure before servicing.**

**WARNING**

**Crushing hazard.**

**Before performing inspections, service or maintenance:**

**Park machine on firm, level surface.**

**Engage parking brake.**

**Turn engine off and remove key.**

**Place “Do Not Operate” tag on control panel.**

**WARNING**

**Entanglement hazard.**

**Keep clear of moving components.**

**Wear proper protective equipment appropriate for the job.**

**WARNING**

**Burn hazard.**

**Hot and high pressure hydraulic oil.**

**Allow oil to cool before servicing.**

# 3 SAFETY SIGNS

## 3.1 MP348 And MP360

The two and four panel safety decals are pictorial and have a yellow background. The panel with a triangle indicates the potential hazard. The panel without a triangle indicates how to avoid the hazard.

If any of the decals are missing, are damaged, or if you do not understand the decal, please contact your dealer.

Dashed line indicates item hidden from view unless cover is opened or removed.

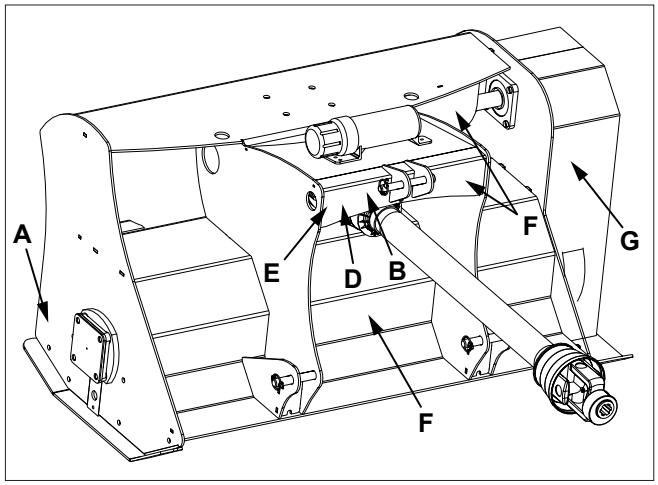


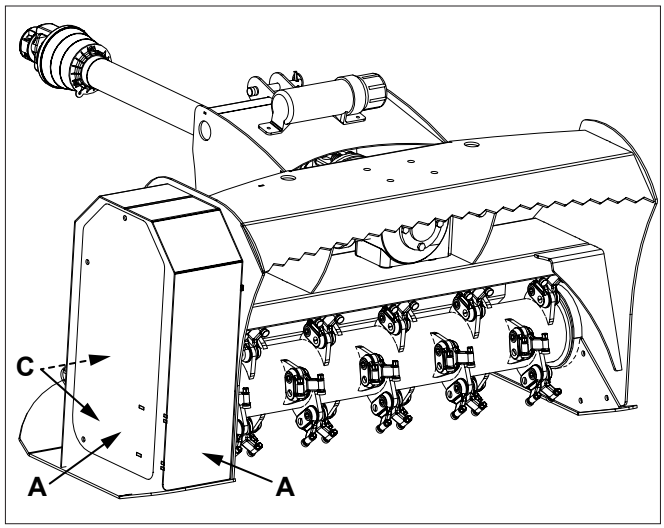


A. D005223 ⚠ WARNING - Rotating rotor hazard. Keep back 75 m while machine is operating. Wait for rotor to stop before approaching machine.

B. D005262 ⚠ WARNING - P65 warning information.

⚠ **WARNING:** This product can expose you to chemicals including 1,3-Butadiene and lead, which are known to the state of California to cause cancer and birth defects or other reproductive harm. For more information go to www.P65Warnings.ca.gov.

D005262

C. D005129 ⚠ WARNING
Rotating parts hazard. Do not reach into machine. Keep away from machine.

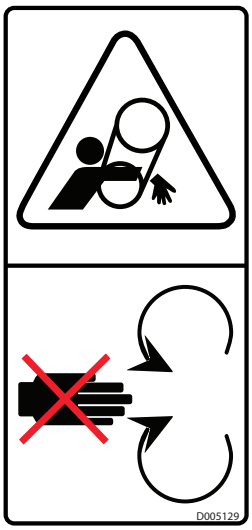


D. D005522 ⚠ WARNING
Remove key before servicing.

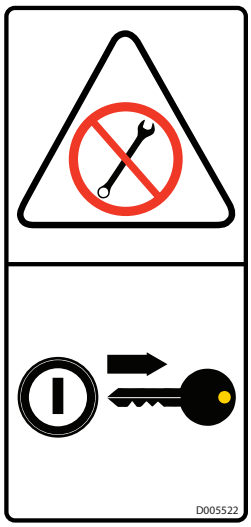


E. D005029 ⚠ WARNING
Read and understand safety signs on the machine and operating instructions in this manual before operating machine.

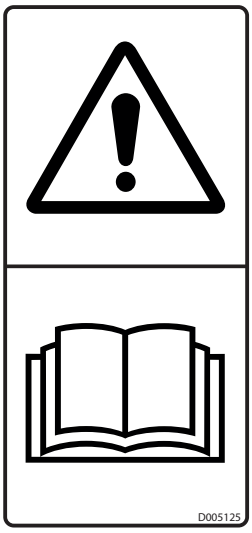


F. D005368 ⚠ WARNING
Rotating driveshaft. Entanglement hazard. Keep away from driveshaft while it is rotating.

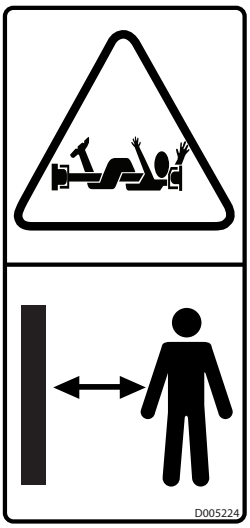


G. D005335 ⚠ WARNING
Wear personal protective equipment appropriate for the job.

## 3.2 MP330

The two and four panel safety decals are pictorial and have a yellow background. The panel with a triangle indicates the potential hazard. The panel without a triangle indicates how to avoid the hazard.

If any of the decals are missing, are damaged, or if you do not understand the decal, please contact your dealer.

Dashed line indicates item hidden from view unless cover is opened or removed.

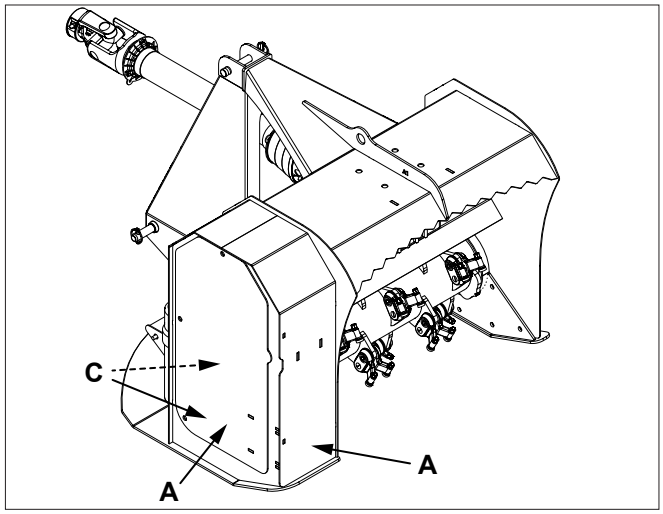


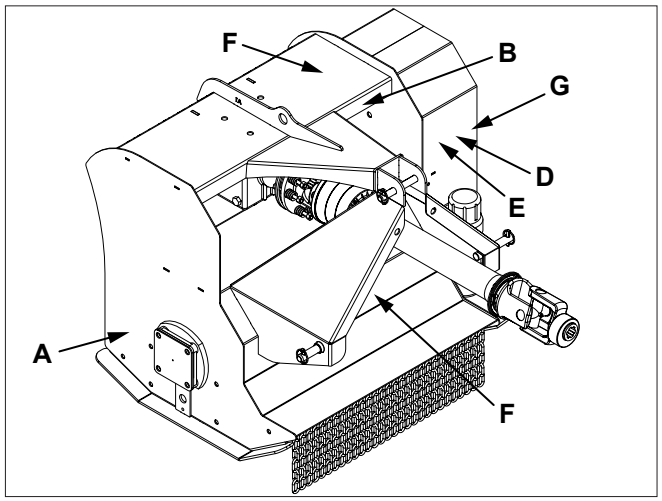


A. D005223 ⚠ WARNING - Rotating rotor hazard. Keep back 75 m while machine is operating. Wait for rotor to stop before approaching machine.

B. D005262 ⚠ WARNING - P65 warning information.

⚠ **WARNING:** This product can expose you to chemicals including 1,3-Butadiene and lead, which are known to the state of California to cause cancer and birth defects or other reproductive harm. For more information go to www.P65Warnings.ca.gov.

D005262

C. D005129 ⚠ WARNING
Rotating parts hazard. Do not reach into machine. Keep away from machine.

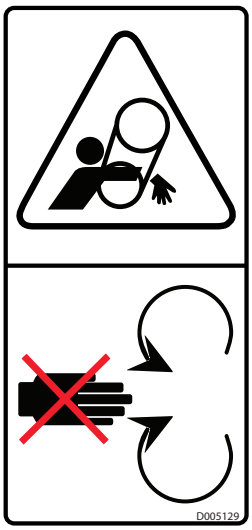


D. D005522 ⚠ WARNING
Remove key before servicing.

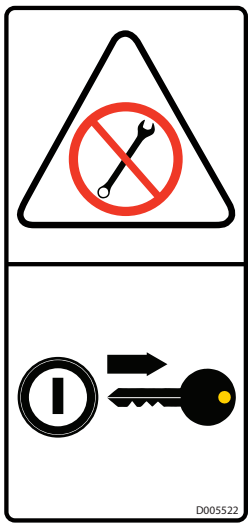


E. D005029 ⚠ WARNING
Read and understand safety signs on the machine and operating instructions in this manual before operating machine.

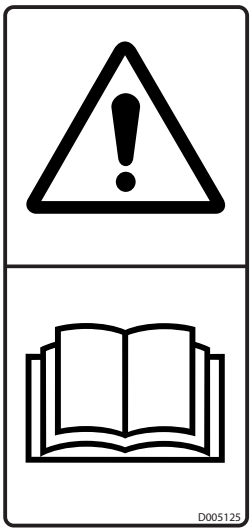


F. D005368 ⚠ WARNING
Rotating driveshaft. Entanglement hazard. Keep away from driveshaft while it is rotating.

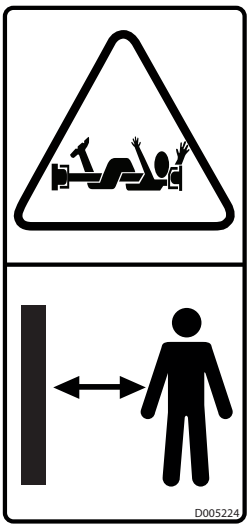


G. D005031 ⚠ WARNING
Wear personal protective equipment appropriate for the job.

# 4 OPERATION

## 4.1 Preparation For Use

**WARNING**

**Drilling, sawing, sanding or machining wood products can expose you to wood dust, a substance known to the State of California to cause cancer.**

**Avoid inhaling wood dust or use a dust mask or other safeguards for personal protection. For more information go to www.P65Warnings.ca.gov/wood.**

**WARNING**

**Wear an approved dust mask or respirator.**

**Follow local, state and federal regulations.**

Although the brush mulcher has been carefully inspected and checked prior to shipment from manufacturer, it is recommended that the unit be thoroughly inspected.

Check all bolts for tightness and remove all shipping tags, bags, skids, and blocking.

Review and understand this manual and operating unit manual.

Remove any masking materials affixed during painting. Inspect the tractor and any accessory equipment to verify that nameplates and all safety warning, caution signs and decals provided with the equipment are in place and clearly visible.

Visually inspect the unit before each start up. Check for loose or missing parts and any damage that may have occurred during moving or shipping.

Review all tractor pre-start instructions, and be sure that all recommended steps and procedures have been followed.

## 4.2 Driveshaft Dimension

A PTO driveshaft is supplied with the machine. To accompany the variety of 3 point hitch geometry available today, the driveshaft can be too long for most machines or too short for others. It is very important that the driveshaft be free to telescope but not to bottom out when going through its working range. If the driveshaft bottoms out, the bearings on both the machine and tractor PTO shaft will be overloaded and fail in a short time.

1. To determine the proper length of the driveshaft, follow this procedure:
   a. Clear the area of all bystanders.
   b. Attach brush mulcher to tractor (see section 4.5) but do not attach driveshaft.
   c. Raise mulcher until the input shaft is level with tractor PTO shaft.
   d. Measure dimension between locking grooves on tractor PTO shaft and machine input shaft.
   e. Measure the same dimensions on the compressed driveshaft.
   f. If compressed driveshaft dimension exceeds the machine dimension, driveshaft will have to be cut.
2. When cutting the driveshaft, follow this procedure:
   a. Subtract machine dimension (A) from uncut driveshaft dimension (B) or (B-A). This dimension determines how much too long the driveshaft is.
   b. Add another 1 inch (25 mm) to the dimension to be sure it doesn't bottom out, to determine (C) the cut off dimension.
   c. Use a hacksaw to cut dimension (C) from both ends. Cut both plastic tubes and metal cores.

d. Use a file to remove burrs from edges that were cut.

e. Assemble the 2 ends of the shaft.

f. Make sure shaft can telescope freely. If it does not, separate the 2 parts and inspect for burrs or cuttings on shaft ends. Be sure it telescopes freely before installing.

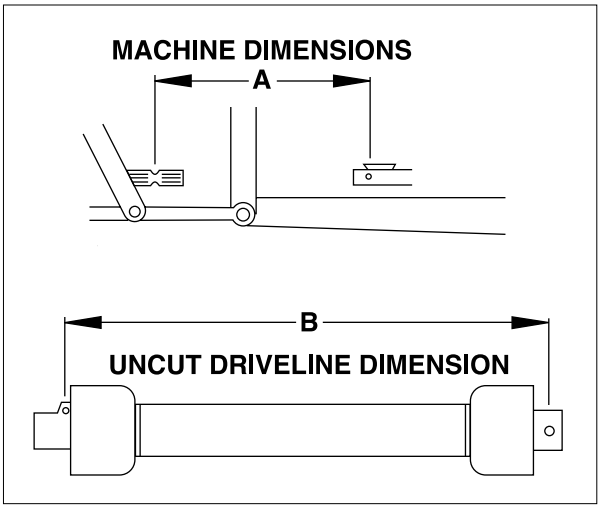


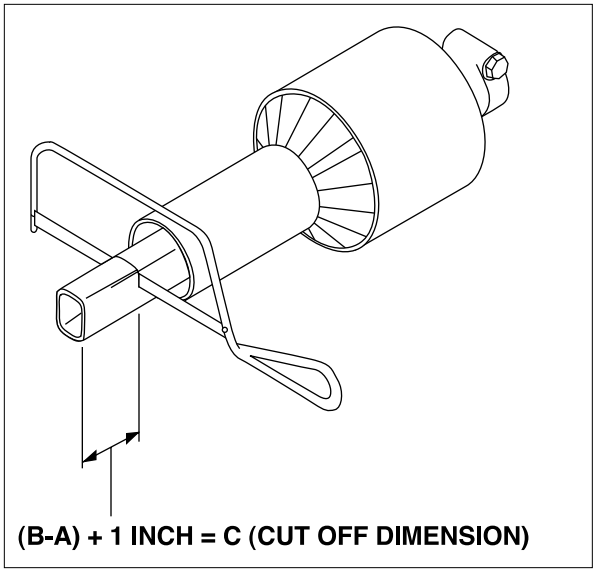


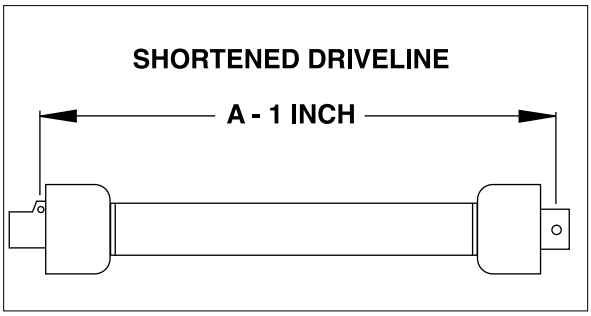

## 4.3 Pre-Operation Check List

| Check-mark | Check these items: | Frequency |
|---|---|---|
| | Check the three linch pins on the hitch to verify they are securely fastened. | Each operation. |
| | Verify the pins on each end of the drive shaft are secured. | Each operation. |
| | Verify the safety chains on the drive shaft are securely attached to the cover. | Each operation. |
| | Verify the cutting tips on the rotor are tight. | Every 4 hours. |
| | Check belt chamber. | Every 4 hours. |
| | Check the oil in the brush mulcher's gearbox. For type and quantity refer to the maintenance section. | Every 200 hours. |

## 4.4 Machine Components

A. Operators Manual Storage Tube

B. 3-Point Top Link

C. 3-Point Lift Points

D. Gear Box

E. Cutting Teeth

F. Rotor

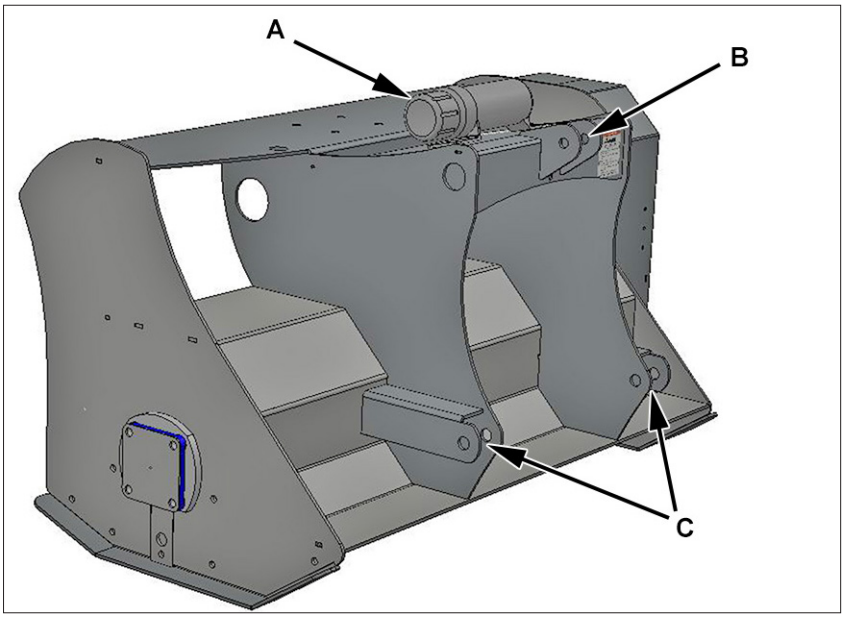


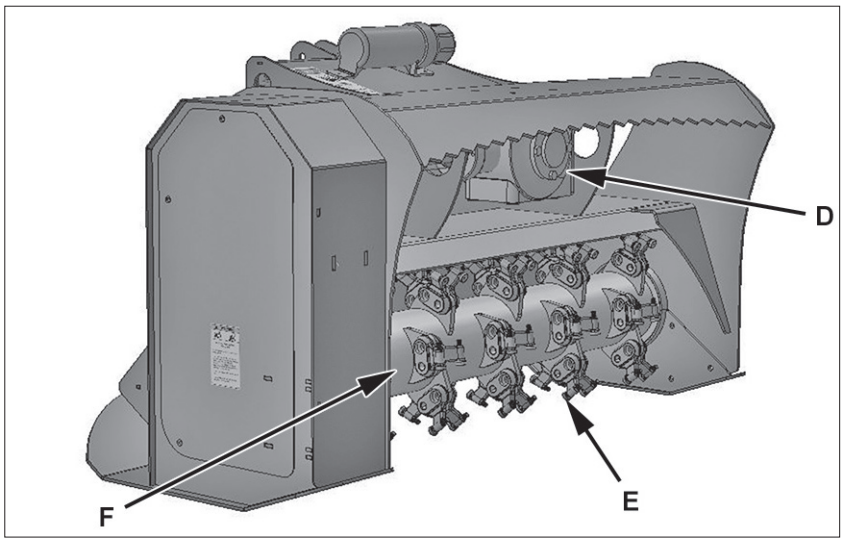

## 4.5 Attach Brush Mulcher

**WARNING**

**To prevent injury or machine damage put transmission in "Park" and check the full range of hitch for interference, binding or PTO separation.**

**Never position yourself between tractor and brush mulcher.**

**Only experienced and properly trained operator's should operate the tractor and brush mulcher.**

1. Back up tractor to brush mulcher with hitch points approximately in alignment.
2. Engage tractor park brake and/or place transmission in "Park".
3. Shut off engine and remove key.
4. Attach lower links to mulcher and retain using linch pins. To avoid machine damage, verify linch pins are locked on lower links.
5. Align top link with hole in top of frame and retain with pin and linch pin. Verify linch pin is locked on pin.
6. Pull PTO collar back toward the mulcher. Align splines on tractor PTO shaft and driveshaft by rotating mulcher driveshaft. Push driveshaft onto PTO shaft until it snaps into place.
7. Pull back on driveshaft to make sure it is locked on shaft.
8. Attach safety shield chain.
9. Adjust top link so that the brush mulcher lower frame is vertical to the ground.

***Note:*** *Always keep the weight of the machine in mind. Never position body in line of impact.*

## 4.6 Detach Brush Mulcher

**WARNING**

**Prevent serious injury or death caused by unexpected movement:**

1. **Park tractor on a level surface.**
2. **Engage tractor park brake.**
3. **Disengage PTO.**
4. **Shut off engine and remove key.**

1. Park tractor on a level surface.
2. Lower mulcher to the ground.
3. Shut off engine and remove key.
4. Disconnect driveshaft safety chain.
5. Support driveshaft with your hand.
6. Pull collar back toward mulcher and slide off shaft.
7. Remove linch pin and pin.
8. Place top link in storage position.
9. Remove linch pins and pins from both lower links.

## 4.7 Transporting

1. Verify all reflectors and Slow Moving Vehicle (SMV) sign are visible.
2. Raise brush mulcher to fully raised position.
3. Verify tractor PTO is disengaged.
4. Travel at a reasonable and safe speed.

**WARNING**

**To prevent bodily injury from rotating cutting wheel, be sure to disengage PTO before transporting mulcher.**

## 4.8 Carbide Teeth Break-In

During the first few hours of use, avoid hitting stones as much as possible to allow the carbide teeth to wear slightly. This can be done by keeping the cutting wheel above ground level.

Brand new carbide tips are razor sharp and can chip and shatter easily when they hit hard objects. Once the razor sharpness has worn away, the tips do not chip as easily.

Observing these precautions will extend the life of the carbide teeth and reduce operating expenses.

## 4.9 First Time User Tips

- First, operate all functions in a clear area with the tractor at idle speed to get a good feel for the controls before you actually move into any brush.
- Choose low density brush and move into it slowly, do not expect to get the first area done fast.
- Slow travel speed if engine bogs down. Doing this will greatly reduce rotor jams, and with practice, will almost eliminate jams.
- Run throttle only at half speed for starters, this will ensure that you do not activate the slip clutch.
- If the slip clutch does activate cool it to normal temperature before resuming operation (with water). A hot clutch will never grip and melts down fast.
- Operate with mulcher slightly raised until you have a better feel how much the unit can take.

**WARNING**

**Always turn off the tractor and disengage the PTO drive before getting off the seat and approaching the cutting wheel.**

**WARNING**

**Drilling, sawing, sanding or machining wood products can expose you to wood dust, a substance known to the State of California to cause cancer.**

**Avoid inhaling wood dust or use a dust mask or other safeguards for personal protection. For more information go to www.P65Warnings.ca.gov/wood.**

**⚠ WARNING**

**Wear an approved dust mask or respirator.**

**Follow local, state and federal regulations.**

## 4.10 Field Operation

**WARNING**

**Entanglement in a rotating driveshaft can cause serious injury or death.**

**Keep tractor shields and driveshaft shields in place at all times. DO NOT operate without driveshaft guards.**

**DO NOT wear loose fitting clothing.**

**WARNING**

**Prevent serious injury or death caused by unexpected movement:**

1. **Park tractor on a level surface.**
2. **Engage tractor park brake.**
3. **Disengage PTO.**
4. **Shut off engine and remove key.**

**WARNING**

**Never operate brush mulcher when other people are in the vicinity.**

**Do not allow riders on tractor.**

**WARNING**

**Drilling, sawing, sanding or machining wood products can expose you to wood dust, a substance known to the State of California to cause cancer.**

**Avoid inhaling wood dust or use a dust mask or other safeguards for personal protection. For more information go to www.P65Warnings.ca.gov/wood.**

**WARNING**

**Wear an approved dust mask or respirator.**

**Follow local, state and federal regulations.**

**WARNING**

**Never operate brush mulcher when other people are in the vicinity. Debris can be thrown several feet from cutting area. Keep all shields in place.**

1. Attach brush mulcher to tractor. See Attaching Brush Mulcher To Tractor in this section.

**WARNING**

**Prevent serious injury or death.**

**Operating unit must be equipped with a forestry guard to protect the operator.**

2. Lower mulcher so skid plates are on ground.
3. Set engine speed to low idle and engage mulcher.
4. Slowly increase engine speed to high idle. Verify mulcher is operating smoothly and start travel.
5. If mulcher stalls, stop movement, slightly raise mulcher and allow rotor to regain speed. Slow ground speed to prevent further stalling.

**WARNING**

**Moving parts can crush and cut.**

**Keep clear of moving components.**

**Lockout operating unit before clearing jams.**

**WARNING**

**Never approach brush mulcher before cutting wheel has come to a complete stop.**

# 5 SERVICE AND MAINTENANCE

## 5.1 Maintenance

| Maintenance Chart | | |
|---|---|---|
| General Inspection | Inspect the unit for any buildup of contamination (dirt, stones, etc.). | Daily |
| Cutting Teeth | Check and rotate or replace one at a time as necessary. With daily use expect to replace 4 to 6 teeth per day. (See Replace Cutting Teeth in this section.) | Every 4 hours. |
| Gearbox Oil | Change gear box oil. Use 90W gear oil. Capacity is 1.5 qt (1.5 L). | Every 2000 hours. |
| Rotor Bearings | Lubricate rotor bearings. | See Section 5.10 |

We design many of our products using industry-standard parts that are widely available from local supply stores.

Many replacement parts such as bearings, belts, seals, touch-up paint and cutting teeth can often be found through local suppliers, not just from Baumalight.

## 5.2 Inspections

**WARNING**

**Prevent serious injury or death caused by unexpected movement:**

1. **Park tractor on a level surface.**
2. **Engage tractor park brake.**
3. **Disengage PTO.**
4. **Shut off engine and remove key.**

**WARNING**

**Drilling, sawing, sanding or machining wood products can expose you to wood dust, a substance known to the State of California to cause cancer.**

**Avoid inhaling wood dust or use a dust mask or other safeguards for personal protection. For more information go to www.P65Warnings.ca.gov/wood.**

**WARNING**

**Wear an approved dust mask or respirator.**

**Follow local, state and federal regulations.**

Inspect the unit for any buildup of contamination (dirt, stones, etc.).

Check cutting teeth every 4 hours of use. Keep cutting teeth in good condition. Unit will cut faster and remaining teeth will last longer if broken teeth are replaced.

## 5.3 Check Belt Tension

1. Lower mulcher to ground.
2. Set parking brake, stop engine and remove key.

**⚠ WARNING**

**Moving parts can crush and cut.**

**Keep clear of moving components.**

**Follow lockout procedure before servicing.**

3. Open inspection cover (A).

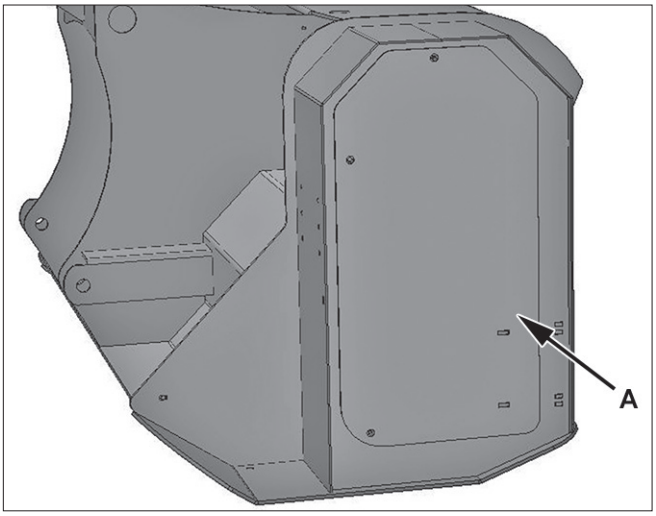


4. Inspect belt (B) for wear, damage, alignment and proper tension.
5. Adjust tension and tighten belt idler bracket (C).
6. Belt deflection (D) should be 0.5 in. (13 mm) at 3.0 lbs of force for a used belt or 4.25 lbs of force for a new belt.
7. Place a straight edge (E) on drive pulley and rotor pulley. Pulleys must be aligned or belt will wear quickly. Adjust pulleys if necessary.
8. Close inspection cover (A). Do not operate mulcher with cover (A) open or removed.

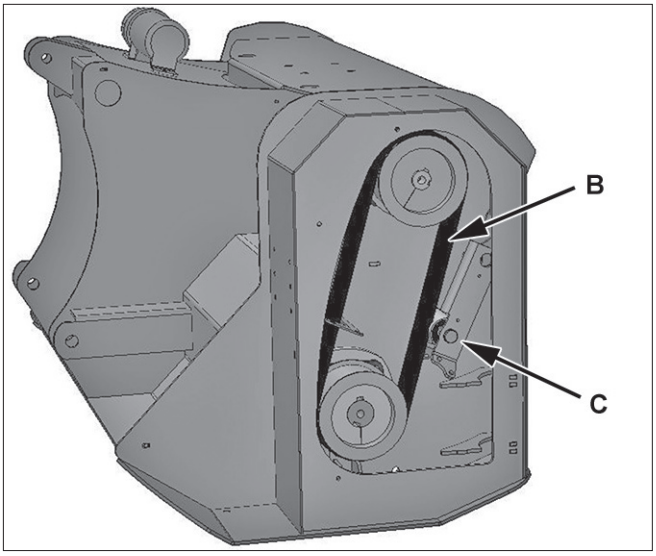


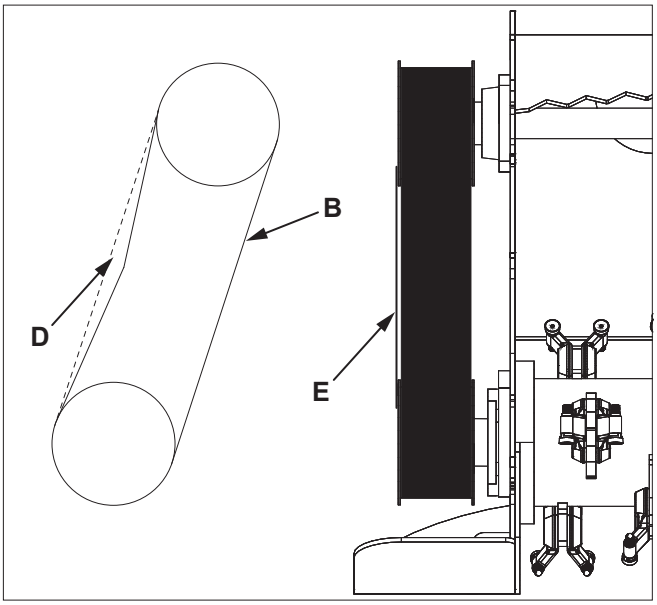

## 5.4 Replace Belt

1. Lower mulcher to ground.
2. Set parking brake, stop engine and remove key.

**WARNING**

**Moving parts can crush and cut.**

**Keep clear of moving components.**

**Follow lockout procedure before servicing.**

3. Open inspection cover (A).

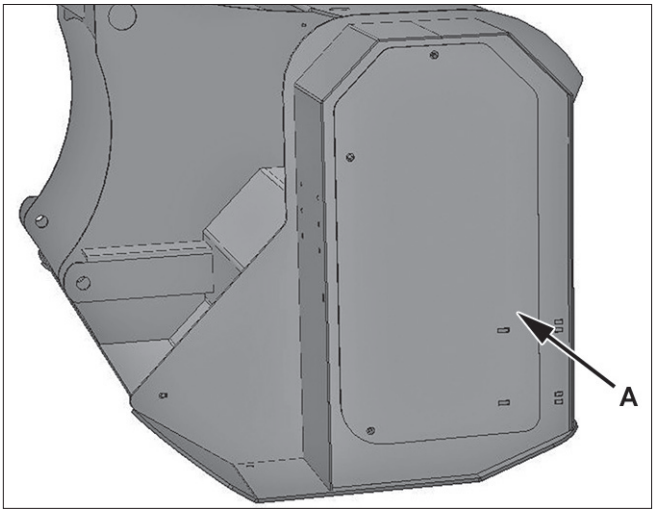


4. Loosen belt idler bracket.
5. Remove shaft pulley bolt (B) and washer (C).
6. Remove three hub bolts (D). Place hub bolts into threaded holes (E) in hub (F).
7. Evenly tighten bolts to push pulley (G) off of hub (F).
8. Remove hub (F), pulley (G) and belt (H). It may be necessary to lightly tap hub if hub stuck to shaft.
9. Install belt, pulley and hub onto shaft.
10. Install washer (C) and shaft bolt (B). Tighten bolt.
11. Align pulley holes with non threaded holes in hub (F) and install bolts (D).
12. Place a straight edge (I) on drive pulley and rotor pulley. Pulleys must be aligned or belt will wear quickly. Adjust pulley alignment as necessary and tighten bolts (D).
13. Belt deflection (J) should be 0.5 in. (13 mm) at 4.25 lbs of force.
14. Adjust tension and tighten belt idler bracket.
15. Close inspection cover (A). Do not operate mulcher with cover (A) open or removed.

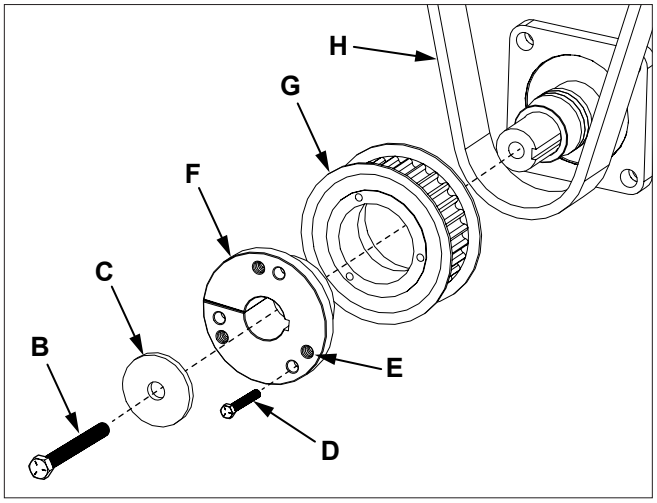


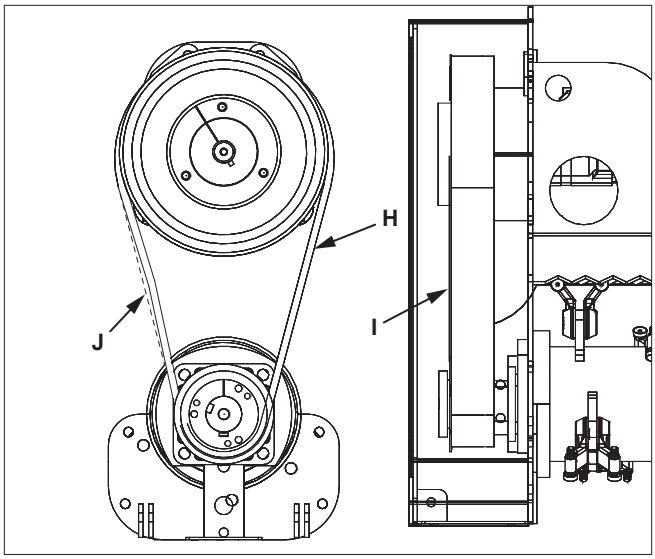

## 5.5 Adjust Slip Clutch

**WARNING**

**Entanglement in a rotating driveshaft can cause serious injury or death.**

**Disconnect and lockout power source before adjusting or servicing.**

**CAUTION**

**Slip clutch may be hot. Wait for clutch to cool before adjusting or servicing.**

**Bondioli Driveshafts**

4-Disk 120 Hp 1,000 rpm
- OEM Part Number
  - 71R8121UCKR80V6
- Dimension A - 0.236 in. (6 mm)
- Dimension B - 1.12 in. (28.5 mm)

4-Disk 165 Hp 1,000 rpm
- OEM Part Number
  - CSHN086U2R100W8
- Dimension A - 0.275 in. (7 mm)
- Dimension B - 1.14 in. (29 mm)

**Binacchi Drivehafts**

2-Disk 68 Hp 540 rpm
- OEM Part Number
  - B6140EA60255
  - B6N121USA60255
  - B6D121US255001
- Dimension A - 0.236 in. (6 mm)
- Dimension B - 1.1 in. (28 mm)

4-Disk 80 Hp 540 rpm
- OEM Part Number
  - B8N111USA60307
  - B8#140EA60307
- Dimension A - 0.275 in. (7 mm)
- Dimension B - 1.15 in. (29 mm)

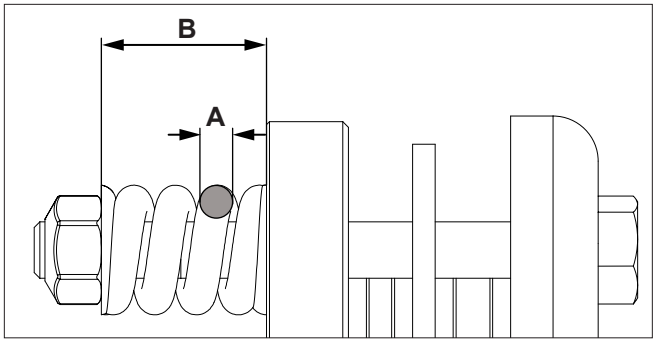

## 5.6 Rotate Cutting Teeth

Each tooth can be rotated up to two times before replacement is necessary.

1. Park tractor and mulcher on a level surface.
2. Lower mulcher to the ground.
3. Shut off engine and remove key.
4. Inspect teeth for wear on top edge. Once top edge is worn, rotate tooth so a new edge is on top (cutting) edge.
5. Loosen locknut on tooth (B) and rotate tooth 1/3 turn. Flat shoulder on tooth will fit against shoulder (C) on tooth holder.
6. Install spacer (A) and locknut.
7. Tighten locknut to torque listed below.

H3000 Teeth - 35 lb/ft (47 Nm)
G3000 Teeth - 35 lb/ft (47 Nm)
W3000 Teeth - 25 lb/ft (34 Nm)

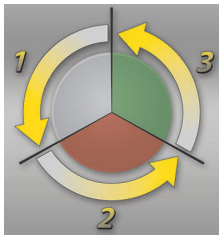


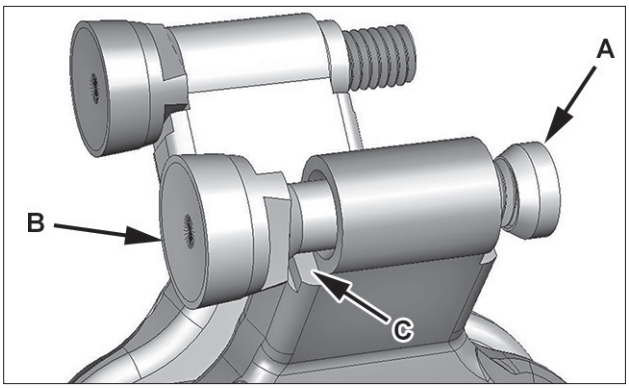


***Note:*** *Parts breakdown can be found on Baumalight's website. www.baumalight.com*

## 5.7 Replace Cutting Teeth

1. Park tractor and mulcher on a level surface.
2. Lower mulcher to the ground.
3. Shut off engine and remove key.
4. Inspect cutting teeth (B) for damage and wear. Replace individual teeth as needed.
5. Remove locknut and spacer (A) on tooth (B). Install new tooth. Flat shoulder on tooth will fit against shoulder (C) on tooth holder.
6. Install spacer (A) and locknut.
7. Tighten locknut to torque listed below.

H3000 Teeth - 35 lb/ft (47 Nm)
G3000 Teeth - 35 lb/ft (47 Nm)
W3000 Teeth - 25 lb/ft (34 Nm)

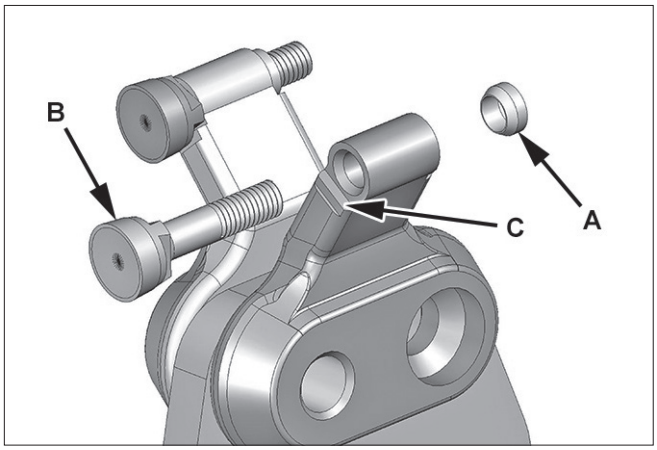


***Note:*** *Parts breakdown can be found on Baumalight's website. www.baumalight.com*

## 5.8 Replace Tooth Holder

1. Park tractor and mulcher on a level surface.
2. Lower mulcher to the ground.
3. Shut off engine and remove key.
4. Inspect tooth holders (A) for damage and wear. Replace individual tooth holders as needed.
5. Remove tooth from tooth holder.
6. Remove mounting hardware on tooth holders. Install new tooth holder.
7. Install tooth into new tooth holder.
8. Tighten tooth locknut to torque listed below.

H3000 Teeth - 35 lb/ft (47 Nm)
G3000 Teeth - 35 lb/ft (47 Nm)
W3000 Teeth - 25 lb/ft (34 Nm)

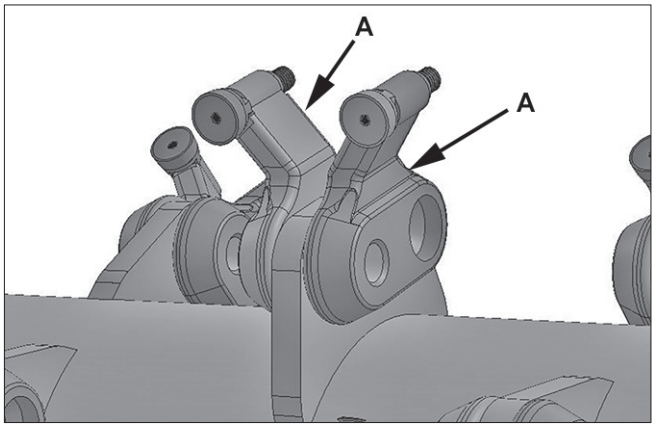


***Note:*** *Parts breakdown can be found on Baumalight's website. www.baumalight.com*

## 5.9 Check Gearbox Oil Level

1. Park tractor and mulcher on a level surface.
2. Lower mulcher to the ground.
3. Shut off engine and remove key.
4. Remove plug (A). Oil level should be 2 in. (51 mm) below plug hole. Bend a piece of wire and insert into hole. Remove wire to check oil level. Add oil if low.
5. Install plug.
6. To change gearbox oil, remove plug (B) to drain oil. Dispose of used oil in an environmentally safe manner. Install plug (B) and fill gearbox through hole (A) until oil is 2 in. (51 mm) below plug hole (A).

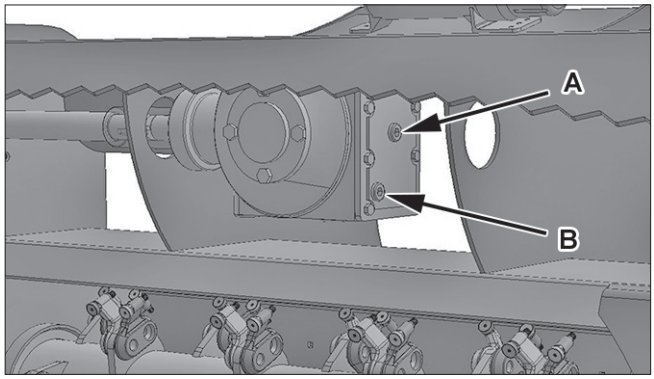


***Note:*** *Parts breakdown can be found on Baumalight's website. www.baumalight.com*

## 5.10 Rotor Bearings

The bearings are factory lubricated with a lithium or lithium complex base grease which is suitable for most applications. Select a grease that is compatible with a lithium or lithium complex grease.

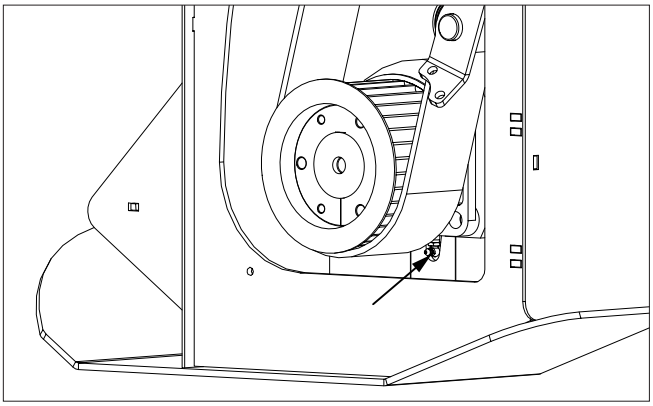

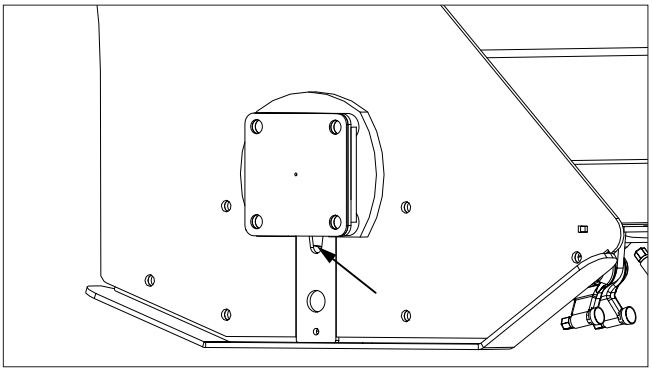

The bearings should contain as much grease as speed will permit. A full bearing with consequent slight leakage through the seal is the best protection against contaminant entry.

Extreme situations may require a change in lubricating periods as dictated by experience.

Generally, a lower quantity of grease at frequent intervals is more effective than a greater quantity at extended lubrication intervals.

Determine lubrication interval from chart below. Typical lubrication quantity is 1 pump from a standard grease gun.

| **Bearing Operation Temperature F° (C°)** | | **Interval** | |
|---|---|---|---|
| Over | Below | | |
| - | 158 (70) | 1-2 Months | 3-6 Weeks |
| 158 (70) | 212 (100) | 2-4 Weeks | 1-2 Weeks |
| 212 (100) | - | 1-7 Days | 1-3 Days |

# 6 TROUBLESHOOTING

| PROBLEM | CHECK | SOLUTION |
|---|---|---|
| Rotor does not spin. | Rotor jammed. | Remove material from rotor. |
| | Verify PTO driveshaft is connected properly. | Connect driveshaft to tractor. |
| | Slip clutch is slipping. | Remove material from rotor. |
| Rotor rotates slow or sluggish. | Drive belt loose. | Tighten drive belt. |
| | Slip clutch is slipping. | 1. Check to determine if the slip clutch is hot. Use Caution: Clutch can be very hot! A hot clutch does NOT grip.<br>2. Slippage on the clutch occurs if there is more power than the unit is rated for: Model MP348 is rated for 25 - 45 hp input. Model MP360 is rated for 30-50 hp input. A bigger tractor can be used if it is idled down. This will decrease the output power of the engine.<br>3. Travel slower to decrease the strain on the clutch.<br>4. Turn the flow control knob to a lower number (1) to reduce the strain on the slip clutch.<br>Be careful when tightening the tension setting on the slip clutch as this could put excess strain on the gear box. |
| Tractor is not able to lift mulcher. | Tractor is too small. | Use proper size tractor. |
| Excessive vibration. | Cutting teeth worn or missing. | Replace worn, broken or missing teeth. |
| | Debris lodged in rotor. | Remove debris. |

# 7 STORAGE

## 7.1 Storing Mulcher

1. Store mulcher in a dry place.
2. Clean mulcher thoroughly. Dirt and wood chips will draw moisture and cause rust.
3. Check condition of cutting teeth. Replace as necessary. (See Service and Maintenance section.)
4. Check for loose or missing hardware.
5. Paint parts as necessary.
6. Store PTO driveshaft off the ground.
7. Refer to slip clutch manufacturers manual for storage procedures.

## 7.2 Removing Mulcher From Storage

1. Review operator's manual and check adjustments.
2. Check gear box oil level. Add oil as necessary. (See Service and Maintenance section.)
3. If parts have been replaced, verify they run properly.
4. Refer to slip clutch manufacturers manual for startup procedures.

**Slip Clutch**

**WARNING**

**Entanglement in a rotating driveshaft can cause serious injury or death.**

**Disconnect and lockout power source before adjusting or servicing.**

1. Disengage tractor PTO. Shut off engine and remove key.
2. Using a marker, scribe a line (A) across the exposed edges of the clutch plate and friction discs.
3. Loosen each compression nuts (B) exactly two revolutions to free clutch friction discs.

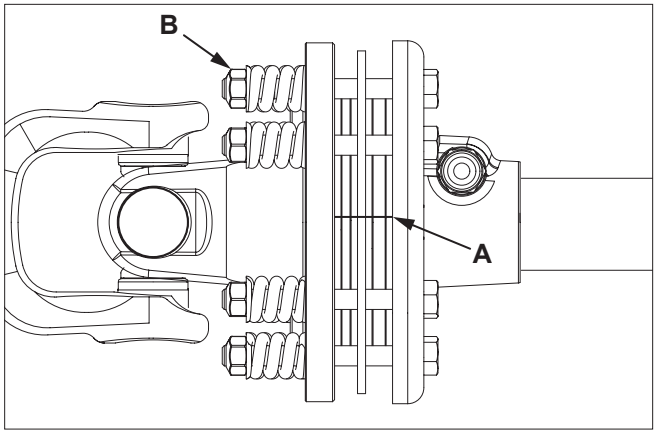


4. Start tractor and run driveshaft at a low idle to slip the friction discs. This will remove the dirt, corrosion and surface floss from clutch plate faces.
5. Disengage tractor PTO. Shut off engine and remove key.
6. Inspect the clutch and ensure that the scribed markings on the disc and plates have changed position. If any two marks are still aligned is an indication that these discs have not slipped. Repeat steps 4-5.
7. After ensuring all discs are free, tighten the compression nuts (B) uniformly, exactly two revolutions to resent the clutch to original pressure.

# BAUMALIGHT ATTACHMENT WARRANTY

To view the warranty, scan the QR Code below, or go to Baumalight.com. From the Support drop down, click on Support, then select Brush Mulchers. Select Product Warranty.

For parts, specifications and the latest machine information please visit our website.

**www.baumalight.com**

MTB MFG INC.
CORPORATE HEADQUARTERS
4575 Powell Rd.,
Wallenstein, Ontario Canada
N0B 2S0
**www.baumalight.com**