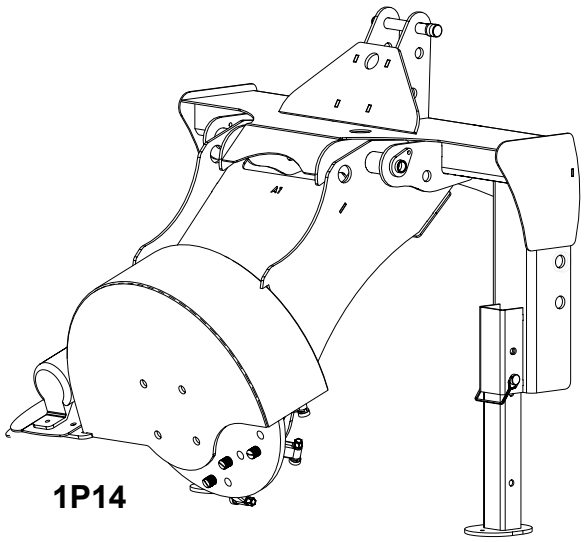

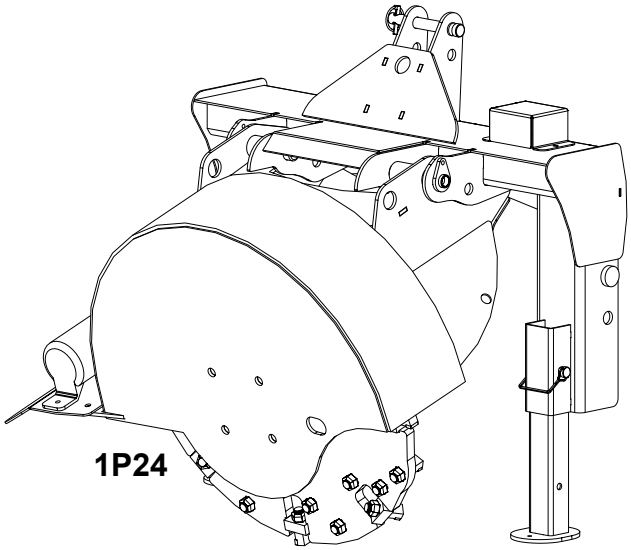

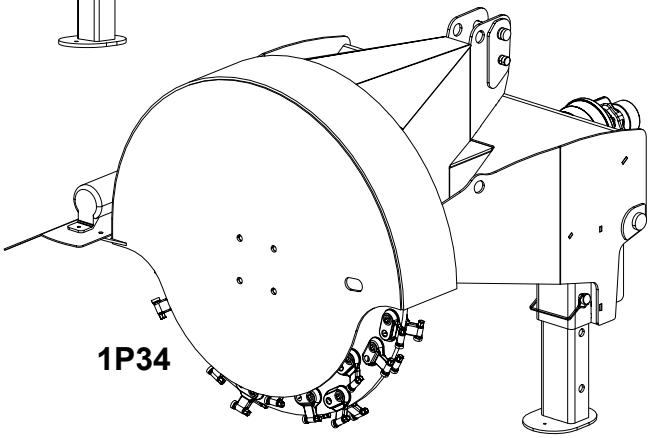

1P14, 1P24 And 1P34 Stump Grinder

OPERATOR'S MANUAL

Issue Date: October 2026

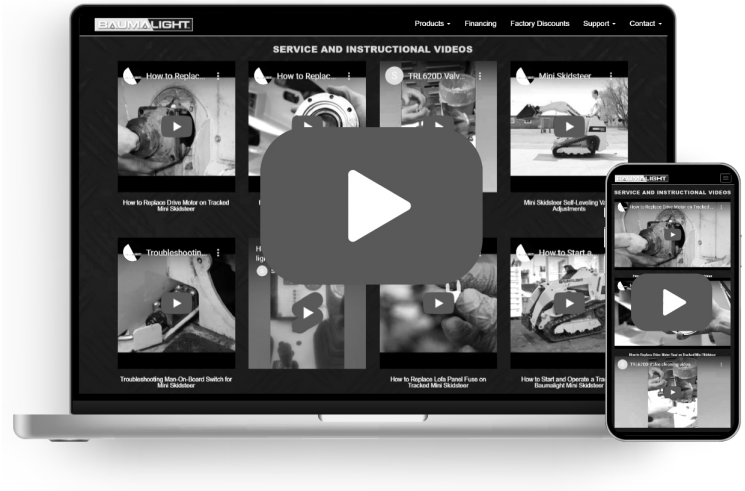

Service And Instructional Videos

Find online at baumalight.com/support

Following is a list of videos and documents available on Baumalights website and also on YouTube to help and enhance maintaining the stump grinder. The list below was current at the time this manual was issued. Additional content may be available.

Activity ID Number	Activity Name	Description	Item Available
51	1P24 Tips Before Getting Started.	1P24 Tips.	Document
389	Replacing Teeth.	When To Replace S1000 Teeth.	Video
226	Slip Clutch Information.	Burnt Clutch.	Document
215	Why Pto Shaft Angle Is Important.	Pto Shaft.	Video
216	Determining Pto Shaft Length.	Pto Shaft Length.	Video
217	D005735 Extension.	Determining If Your Tractor Needs It. Plus Installation Demo.	Video
58	Change Rotor.	Change Rotor.	Video
224	Replacing Teeth.	When To Replace H3000 Teeth.	Video

TABLE OF CONTENTS

1 INTRODUCTION 4
1.1 Overview 4
1.2 Intended Use And Foreseeable Misuse 4
2 SAFETY 5
2.1 Safety Alert Symbol And Safety Words 5
2.2 Operational Hazards 5
Prepare For Emergencies 6
Replace Safety Signs 7
Do Not Allow Riders 7
Lower Operating Speed 7
Avoid Rollover 7
Avoid Powerlines & Underground Utilities 7
Detach Stump Grinder Safely 7
Hazards From Modifying Equipment 8
2.3 Maintenance Hazards 9
3 SAFETY SIGNS 10
3.1 Safety Signs - 1P14 10
3.2 Safety Signs - 1P24 12
3.2 Safety Signs - 1P34 14
4 ASSEMBLY 16
4.1 Attach Driveshaft 16
4.2 Driveshaft Dimension 16
5 OPERATION 18
5.1 Preparation For Use 18
5.2 Pre-Operation Check List 18
5.3 Machine Components 19
5.4 Attach Stump Grinder To Tractor 19
5.5 Detach Stump Grinder From Tractor 22
5.6 Transporting 22
5.7 Carbide Teeth Break-In 22
5.8 First Time User Tips 23
5.9 Field Operation 24
6 SERVICE AND MAINTENANCE 26
6.1 Maintenance 26
6.2 Rotate Cutting Teeth - 1P14/1P34 27
6.3 Replace Cutting Teeth - 1P14/1P34 27
6.4 Replace Tooth Holder - 1P14/1P34 28
6.5 Replace Cutting Teeth - 1P24 28
6.6 Rotor Bearings 29
6.7 Adjust Slip Clutch 30
7 TROUBLESHOOTING 31
8 STORAGE 33
8.1 Storing Grinder 33
8.2 Remove From Storage 33
8.2.1 Slip Clutch 33
9 WARRANTY 34

1 INTRODUCTION

1.1 Overview

Congratulations on your choice of a Baumalight 3-Point Stump Grinder to complement your stump grinding operation. This equipment has been designed and manufactured to meet the needs of a discriminating buyer for efficient grinding of stumps.

Heavy tooth population makes finer mulch and smoother operation.

The cutting wheel is powered by the PTO (540) on your tractor.

Grease zerks are provided at major pivot points for extended service life.

The debris shields is standard equipment on all stump grinders. It is recommended that the stump grinder never be operated without one.

Safe, efficient and trouble free operation of your stump grinder requires that you and anyone else who will be operating or maintaining the stump grinder, read and understand the Safety, Operation, Maintenance and Troubleshooting information contained within the Operator's Manual.

This manual covers the Baumalight 1P14, 1P24 and 1P34 3-Point Stump Grinders. Use the Table of Contents as a guide to locate required information.

Keep this manual handy for frequent reference and to pass on to new operators or owners. Contact your Baumalight dealer if you need assistance, information or additional copies of the manuals.

When this machine is worn out and no longer in use, it should be returned to the retailer or other party for recycling.

OPERATOR ORIENTATION - The directions left, right, front and rear, as mentioned throughout this manual, are as seen from the tractor driver's seat and facing in the direction of travel.

1.2 Intended Use And Foreseeable Misuse

The stump grinding tool is designed to be used by experienced operators, trained in the safe operation of a tractor and trained in the hazards related to using the stump grinder and the safe use of the grinder for the intended purpose. Operators will require personal protective equipment to reduce the risk from some hazards that cannot be completely eliminated or controlled by the design of the tool.

Each model in the family is intended to be used within the stump size limits shown in the catalog and in the implement specifications in the manual.

Care is required to ensure that the stump grinding tool will not come across metallic objects, stones or other materials harder than a typical stump while grinding.

Stump grinding tools are not designed for use in hazardous atmospheres where there is a risk of fire or explosion due to flammable gases or vapors. Use in hazardous, explosive atmospheres is prohibited.

Serious injury or death of the operator or bystanders may be caused if the tool is misused. Misuse may also cause damage to the tractor carrying the implement.

2 SAFETY

2.1 Safety Alert Symbol And Safety Words

You must read, understand and follow the instructions given by the operating unit manufacturers, as well as the instructions in this manual.

The safety information in this manual is denoted by the safety alert symbol:

This symbol means ATTENTION! BECOME ALERT! YOUR SAFETY IS INVOLVED!

The level of risk is indicated by the following signal words:

DANGER

DANGER - Indicates a hazardous situation, which, if not avoided, WILL result in death or serious injury.

WARNING

WARNING - Indicates a hazardous situation, which, if not avoided, could result in death or serious injury.

CAUTION

CAUTION - Indicates a hazardous situation, which, if not avoided, could result in minor or moderate injury.

NOTICE

NOTICE - Indicates a situation that could result in damage to the equipment or other property.

2.2 Operational Hazards

WARNING

Prevent serious injury or death.

Read and understand this manual before operating stump grinder.

Always stop engine and remove key before leaving operators seat.

Never allow anyone near the stump grinder during operation.

Travel at a safe speed.

WARNING

Prevent serious injury or death from moving parts.

Moving parts can crush and dismember.

Do not operate without guards and shields in place.

Disconnect and lock out power source before adjusting or servicing.

WARNING

Use stump grinder only for the designed applications.

Any other use may result in personal injury, damage to equipment and may void the warranty.

WARNING

Prevent serious injury or death.

Verify stump grinder is attached to tractor before operation or transport.

Carefully read all safety messages in this manual and on equipment safety signs. Keep safety signs in good condition and replace missing or damaged safety signs.

New equipment components and repair parts must include the current safety decal.

Learn how to properly operate equipment. NEVER operate or work around this equipment without proper instruction, while fatigued or under the influence of alcohol, prescription or non-prescription medication or if feeling ill.

Keep your equipment in proper working condition.

Know the regulations and laws that apply to you and your industry. This manual is not to replace any regulations or laws. Additional information may be found at: www.asae.org or www.osha.gov.

If you do not understand any part of this manual, contact your Baumalight dealer.

Prepare For Emergencies

- Be prepared in case of emergencies.
- Keep a fire extinguisher and first aid kit close to the machine.

WARNING

Prevent serious injury or death.

Read and understand this manual before operating stump grinder.

Always stop engine and remove key before leaving operators seat.

Never allow anyone near the stump grinder during operation.

Travel at a safe speed.

WARNING

Prevent serious injury or death from moving parts.

Moving parts can crush and dismember.

Do not operate without guards and shields in place.

Disconnect and lock out power source before adjusting or servicing.

WARNING

Use stump grinder only for the designed applications.

Any other use may result in personal injury, damage to equipment and may void the warranty.

Replace Safety Signs

- Replace missing or damaged safety signs.
- Safety signs are identified in Section 3 of this manual.
- Replacement safety signs are available from your Baumalight dealer.

Do Not Allow Riders

- NEVER lift or carry anyone with stump grinder.
- NEVER use stump grinder as a work platform.
- NEVER allow passengers on stump grinder.

Lower Operating Speed

- Lower operating speed while loading, unloading or performing heavy operations.
- Keep load low and move at slow speeds on rough or uneven terrain.

Avoid Rollover

The equipment may rollover, resulting in death or serious injury. To help prevent rollover:

- Travel at a slow speed.
- Avoid sharp turns & sudden movement on slopes.
- Carry loads close to the ground.
- Avoid holes, ditches and other obstructions which may cause equipment to rollover.
- Balance load so weight is evenly distributed and load is stable.
- Use caution when operating on slopes and do not operate on excessively steep slopes.
- Do not exceed load capacity of equipment.

Avoid Powerlines & Underground Utilities

- Check clearance before raising equipment.
- Have local utilities locate and mark buried wires, cables, pipelines and other hazards before grinding.

⚠ DANGER

Prevent electrocution.

Death or serious injury can result if equipment comes near or contacts power lines.

Electrocution can occur without direct contact.

DO NOT leave the operator's seat if any part of the equipment contacts electric lines or cables.

Detach Stump Grinder Safely

Detach stump grinder on a firm and level surface. Stump grinder may fall over if detached on sloping or soft surface. Be sure people, livestock and pets are clear of machinery.

Raised Attachment

WARNING

Crushing hazard.

Raised, unsupported stump grinder can fall, resulting in death or serious injury.

Never enter the area under a raised stump grinder unless properly supported.

A raised stump grinder can lower unexpectedly, resulting in death or serious injury.

NEVER enter area under a raised stump grinder unless stump grinder is properly and safely supported.

Lower stump grinder to ground, engage parking brake, shut off engine and remove key before servicing.

Avoid Loud Noise

WARNING

Prolonged exposure to loud noise can cause impairment or loss of hearing.

Wear a suitable hearing protective device such as earmuffs or earplugs to protect against objectionable or uncomfortable loud noises.

Hazards From Modifying Equipment

Do not make any alterations to your stump grinder. Altering the equipment may cause unsafe conditions and may void the manufacturer's warranty.

Stay Clear Of Rotating Driveshafts

WARNING

Entanglement in a rotating driveshaft can cause serious injury or death.

Keep tractor shields and driveshaft shields in place at all times. DO NOT operate without driveshaft guards.

DO NOT wear loose fitting clothing.

Avoid Wood Dust Inhalation

WARNING

Drilling, sawing, sanding or machining wood products can expose you to wood dust, a substance known to the State of California to cause cancer.

Avoid inhaling wood dust or use a dust mask or other safeguards for personal protection. For more information go to www.P65Warnings.ca.gov/wood.

WARNING

Wear an approved dust mask or respirator.

Follow local, state and federal regulations.

2.3 Maintenance Hazards

Before servicing, park machine on a firm and level surface, set parking brake, chock wheels, and place a “Do Not Operate” tag on control panel. Read and understand this manual. If you do not understand any part of the manual, contact your Baumalight dealer.

Always wear face and/or eye protection, safety shoes, and other protective equipment appropriate for the job.

Do not make unauthorized modifications. Contact your Baumalight dealer before you weld, cut/drill holes, or make any other modifications.

WARNING

Moving parts can crush and cut.

Keep clear of moving components.

Follow lockout procedure before servicing.

WARNING

Crushing hazard.

Before performing inspections, service or maintenance:

- **Park machine on firm, level surface.**
- **Engage parking brake.**
- **Turn engine off and remove key.**
- **Place “Do Not Operate” tag on control panel.**

WARNING

Entanglement hazard.

Keep clear of moving components.

Wear proper protective equipment appropriate for the job.

3 SAFETY SIGNS

3.1 Safety Signs - 1P14

The two and four panel safety decals are pictorial and have a yellow background. The panel with a triangle indicates the potential hazard. The panel without a triangle indicates how to avoid the hazard.

If any of the decals are missing, are damaged, or if you do not understand the decal, please contact your Baumalight dealer.

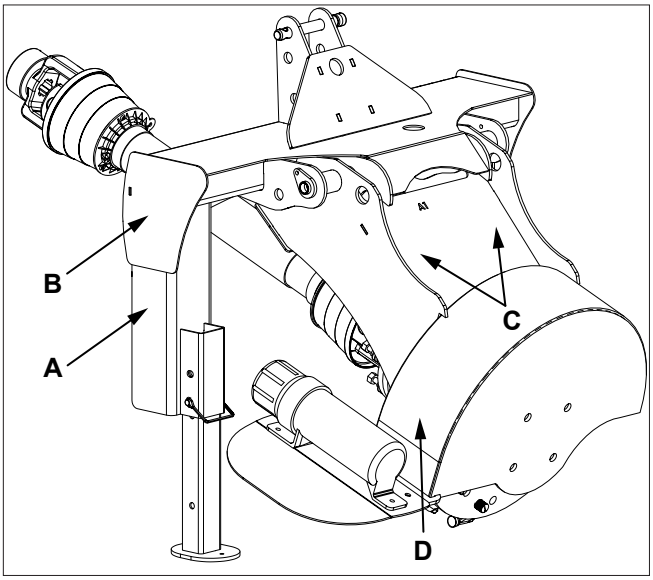

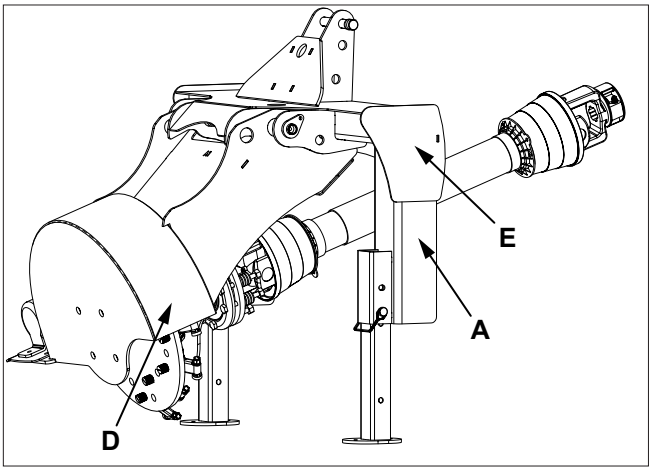

A. D005368 ⚠ WARNING - Rotating driveshaft. Entanglement hazard. Keep away from driveshaft while it is rotating.

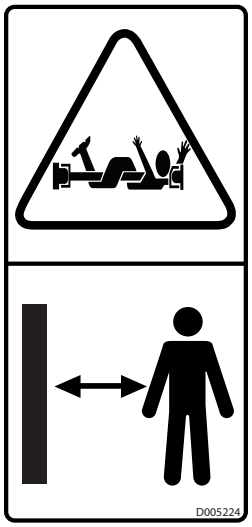

B. D007679 ⚠ WARNING - Read and understand safety signs on the machine and operating instructions in this manual before operating machine.

⚠ WARNING - Remove key before servicing.

C. D005039 ⚠ WARNING - Pinch point / crush hazard. Do not reach into machine. Keep away from machine.

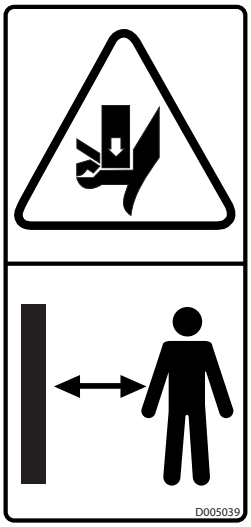

D. D005223 ⚠ WARNING - Rotating blade hazard. Keep back 75 m while machine is operating. Wait for blade to stop before approaching machine.

E. D005031 ⚠ WARNING - Wear personal protective equipment appropriate for the job.

3.2 Safety Signs - 1P24

The two and four panel safety decals are pictorial and have a yellow background. The panel with a triangle indicates the potential hazard. The panel without a triangle indicates how to avoid the hazard.

If any of the decals are missing, are damaged, or if you do not understand the decal, please contact your Baumalight dealer.

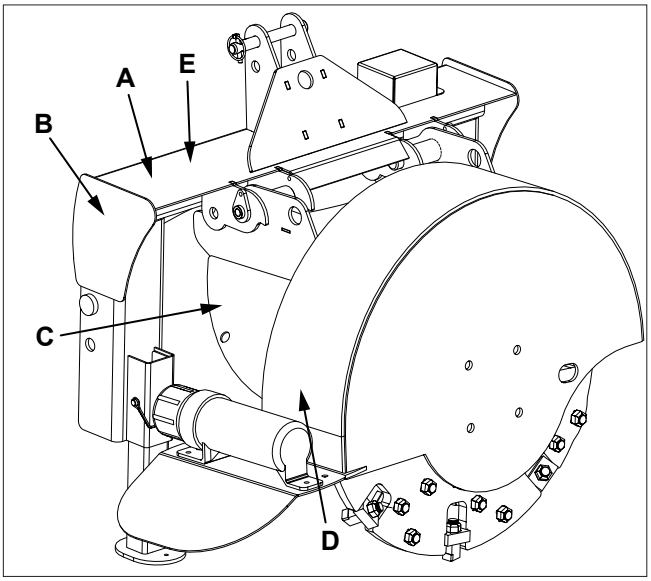

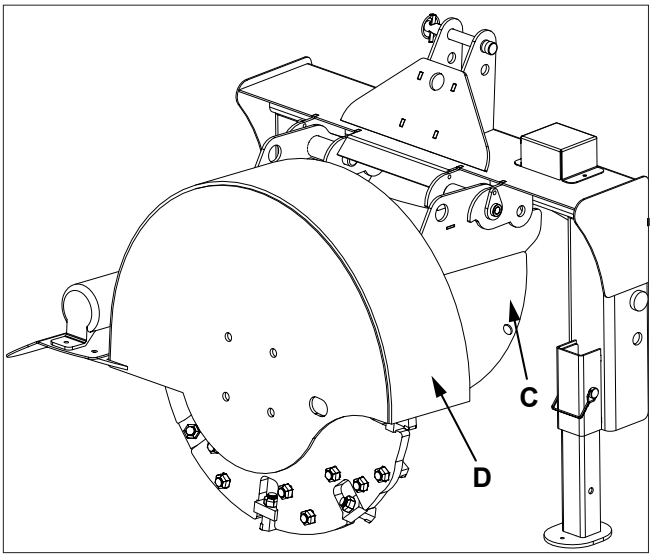

A. D005224 ⚠ WARNING - Rotating driveshaft. Entanglement hazard. Keep away from driveshaft while it is rotating.

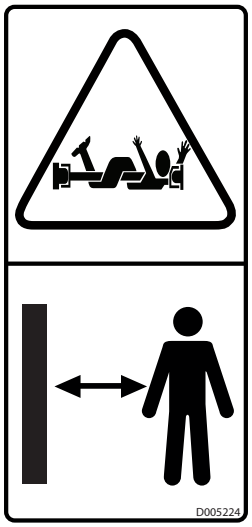

B. D005935 ⚠ WARNING - Read and understand safety signs on the machine and operating instructions in this manual before operating machine.

⚠ WARNING - Remove key before servicing.

C. D005039 ⚠ WARNING - Pinch point / crush hazard. Do not reach into machine. Keep away from machine.

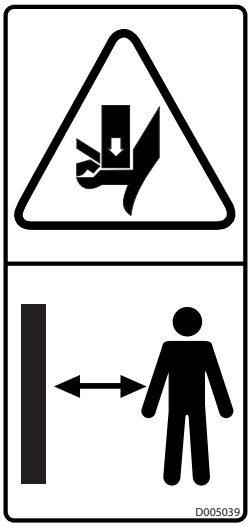

D. D005223 ⚠ WARNING - Rotating blade hazard. Keep back 75 m while machine is operating. Wait for blade to stop before approaching machine.

E. D005335 ⚠ WARNING - Wear personal protective equipment appropriate for the job.

3.2 Safety Signs - 1P34

The two and four panel safety decals are pictorial and have a yellow background. The panel with a triangle indicates the potential hazard. The panel without a triangle indicates how to avoid the hazard.

If any of the decals are missing, are damaged, or if you do not understand the decal, please contact your Baumalight dealer.

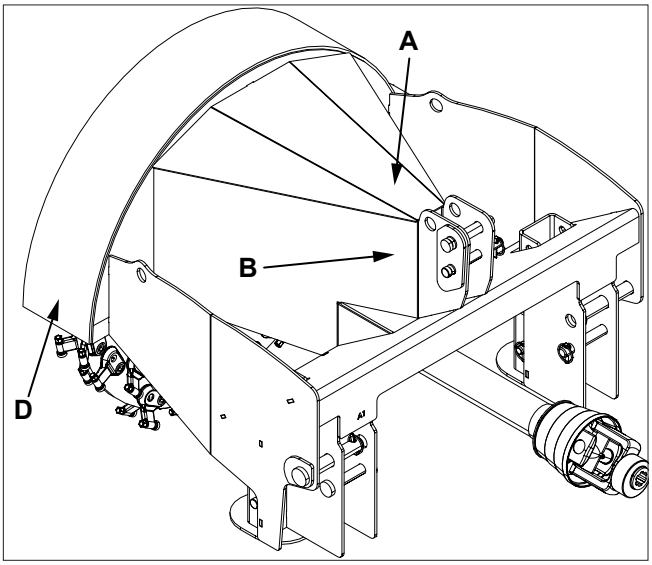

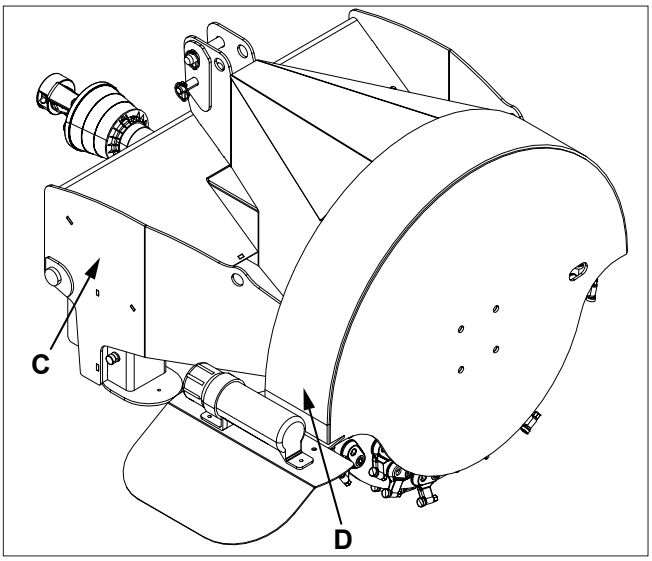

A. D005224 ⚠ WARNING - Rotating driveshaft. Entanglement hazard. Keep away from driveshaft while it is rotating.

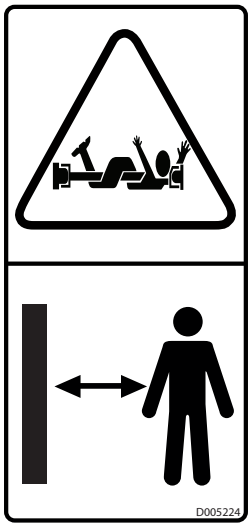

B. D005335 ⚠ WARNING - Wear personal protective equipment appropriate for the job.

C. D005935 ⚠ WARNING - Read and understand safety signs on the machine and operating instructions in this manual before operating machine.

⚠ WARNING - Remove key before servicing.

D. D005223 ⚠ WARNING - Rotating blade hazard. Keep back 75 m while machine is operating. Wait for blade to stop before approaching machine.

4 ASSEMBLY

4.1 Attach Driveshaft

1. Attach driveshaft (A) to gear box shaft (B).
2. Install nut and bolt in driveshaft.
3. Attach safety shield chain.

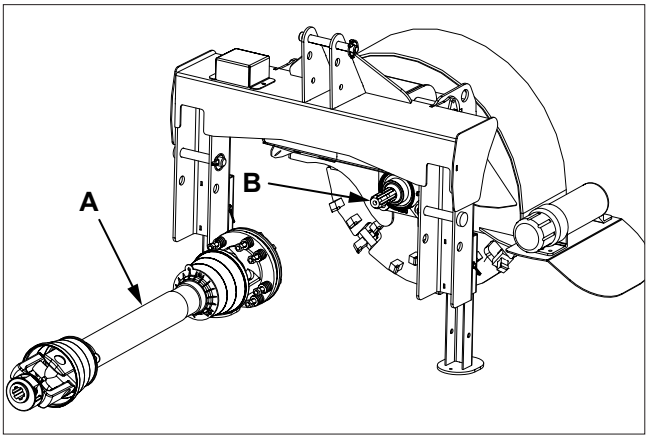

4.2 Driveshaft Dimension

To accompany the variety of 3 point hitch geometry available today, the driveshaft can be too long for some machines or too short for others. It is very important that the driveshaft be free to telescope but not to bottom out when going through its working range. If the driveshaft bottoms out, the bearings on both the machine and tractor PTO shaft will be overloaded and fail in a short time.

Determine If Extension Kit Is Needed

On tractor that will be used, measure dimension (A) from PTO lock groove to center of lower link arm pin holes.

Extension brackets (B) are necessary to increase PTO shaft length and maximize shaft overlap through the three point hitch range of movement.

Determine Driveshaft Length

1. Attach stump grinder to tractor but do not attach driveshaft to tractor. See 5.4 Attach Stump Grinder To Tractor. Remove stabilizer pin (A) from shipping position (B) and use as top link pin. Check swing frame to ensure that it is free from obstruction and can operate smoothly without binding.

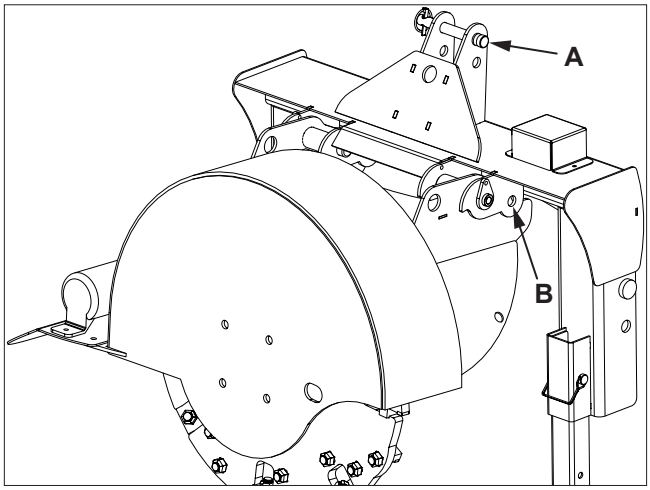

2. Raise grinder until the input shaft is level with tractor PTO shaft.
3. Measure dimension (C) between locking grooves on tractor PTO shaft and stump grinder input shaft.
4. Measure same dimension (D) on compressed driveshaft.

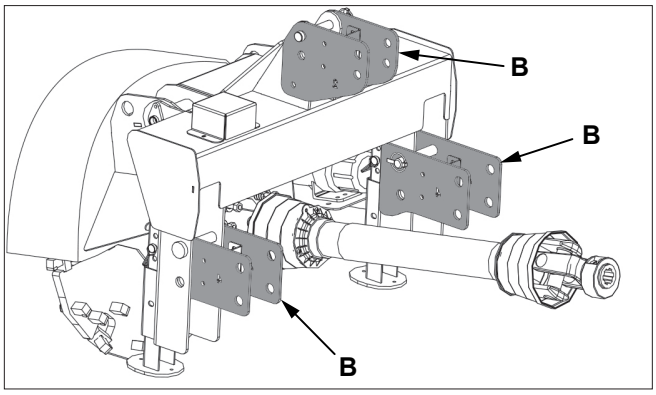

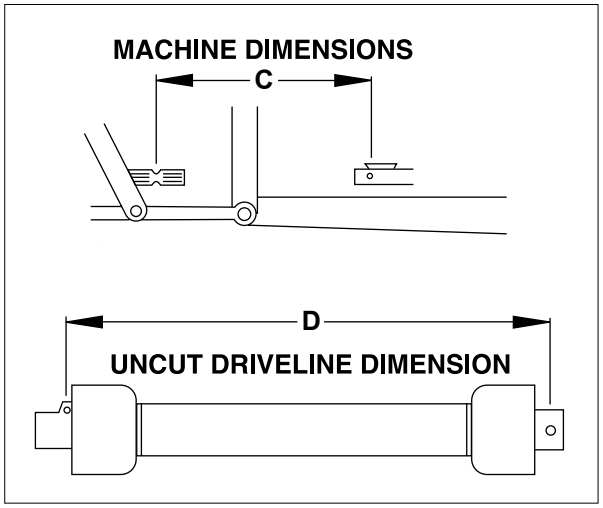

5. If compressed driveshaft dimension (D) exceeds the machine dimension (C), driveshaft must be cut.

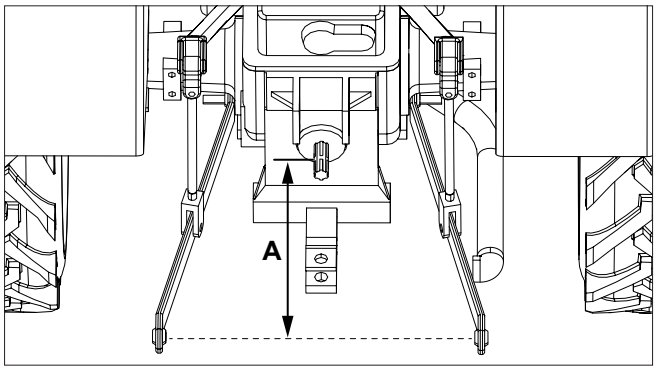

If dimension (A) is less than 20 in. (508 mm), order D005735 Extension Bracket Kit.

Cut Driveshaft

1. Subtract machine dimension (C) from uncut driveshaft dimension (D). This dimension determines how much too long the driveshaft is.
2. Add 1 in. (25 mm) to the dimension to be sure it doesn't bottom out, to determine cut off dimension (E).
3. Use a hacksaw to cut dimension (E) from both ends. Cut equal lengths of both shafts. Cut both plastic tubes and metal cores.

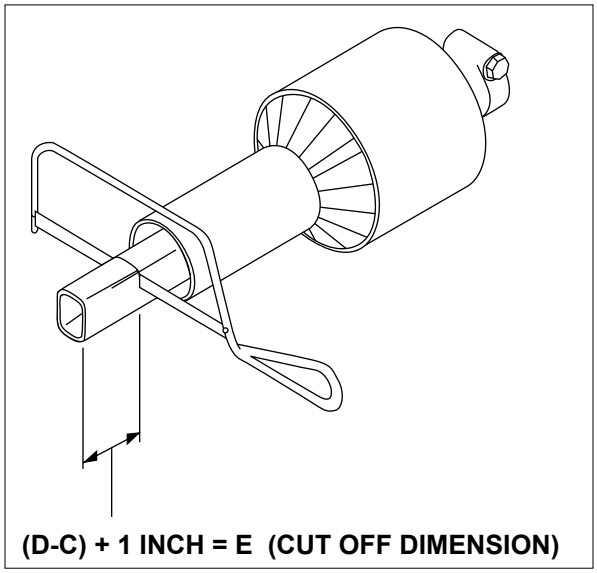

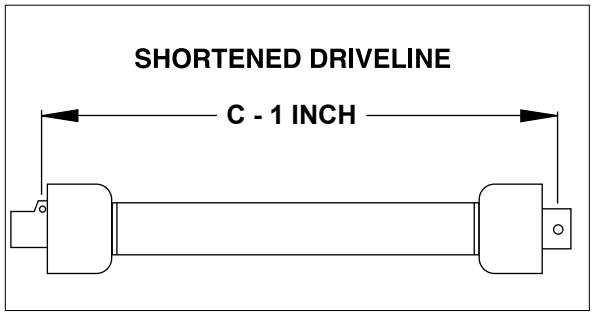

4. Use a file to remove burrs from cut edges.
5. Assemble shaft.
6. Make sure shaft can telescope freely. If it does not, separate and inspect for burrs or cuttings on shaft ends. Be sure it telescopes freely before installing.

5 OPERATION

5.1 Preparation For Use

WARNING

Drilling, sawing, sanding or machining wood products can expose you to wood dust, a substance known to the State of California to cause cancer.

Avoid inhaling wood dust or use a dust mask or other safeguards for personal protection. For more information go to www.P65Warnings.ca.gov/wood.

WARNING

Wear an approved dust mask or respirator.

Follow local, state and federal regulations.

Although the stump grinder has been carefully inspected and checked prior to shipment from manufacturer, it is recommended that the unit be thoroughly inspected.

Check all bolts for tightness and remove all shipping tags, bags, skids, and blocking.

Remove any masking materials affixed during painting. Inspect the tractor and any accessory equipment to verify that nameplates and all safety warning, caution signs and decals provided with the equipment are in place and clearly visible.

Verify the three lynch pins are securely fastened.

Visually inspect the unit before each start up. Check for loose or missing parts and any damage that may have occurred during moving or shipping.

Review all tractor pre-start instructions, and ensure that all recommended steps and procedures have been followed. Never bar over the rotor, This could cause damage and result in personal injury or equipment damage.

Note: *Always keep the weight of the machine in mind. Never position body in line of impact.*

5.2 Pre-Operation Check List

Check these items:	Frequency
Check the three lynch pins on the hitch to verify they are securely fastened.	Each operation.
Verify the pins on each end of the drive shaft are secured.	Each operation.
Verify the safety chains on the drive shaft are securely attached to the cover.	Each operation.
Grease pivot pins	Each operation.
Verify the cutting tips on the cutting wheel are tight.	Every 4 hours.

5.3 Machine Components

A. Stabilizer/3-Point Top Link Pin
B. Cutting Wheel Shield
C. Manual Storage Tube
D. Debris Shield
E. Parking Stands
F. Cutting Wheel
G. 3-Point Lower Links

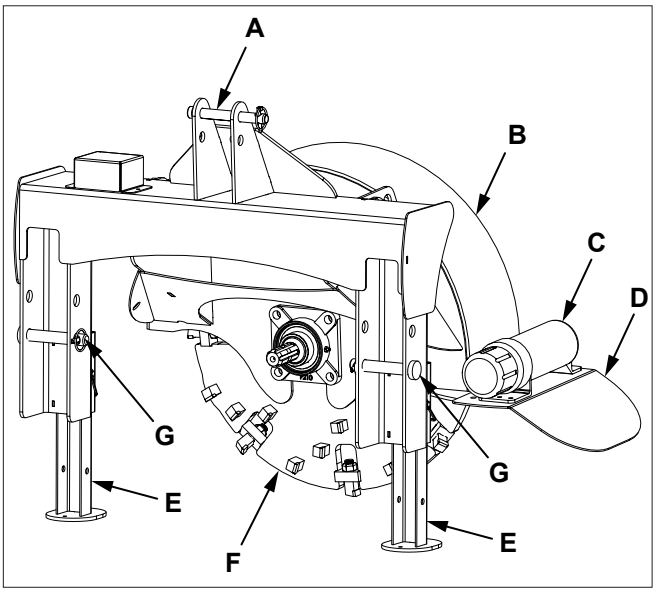

5.4 Attach Stump Grinder To Tractor

⚠ WARNING

To prevent injury or machine damage put transmission in "Park" and check the full range of hitch for interference, binding or PTO separation.

Never position yourself between tractor and stump grinder.

Only experienced and properly trained operator's should operate the tractor and stump grinder.

Note: *Tractors must have hydro-static drive. On subcompact tractors with short lift arms, D005735 Extension Kit is required. See Section 4.2 Driveshaft Dimension.*

1. Read all safety instructions.
2. Check for loose teeth or any other loose parts.
3. Verify there is sufficient visibility and maneuverability to move up to stump grinder.
4. Stump grinder is setup for a CAT1 quick hitch. Setup will vary based on the brand of quick hitch used. Verify pins are secure in the correct position.
5. Remove stabilizer pin (A) from shipping position (B) and use as top link pin.

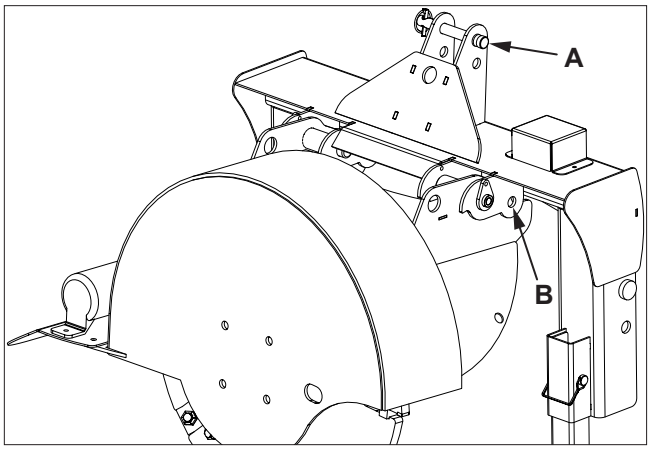

6. Attach tractor to stump grinder. See tractor Operator's Manual.
7. Pull collar (C) back toward the grinder. Align splines on tractor PTO shaft and driveshaft by rotating grinder driveshaft. Push driveshaft onto PTO shaft until it snaps into place.
8. Pull back on driveshaft to make sure it is locked on tractor pto shaft.
9. Attach safety shield chain (D) as shown.

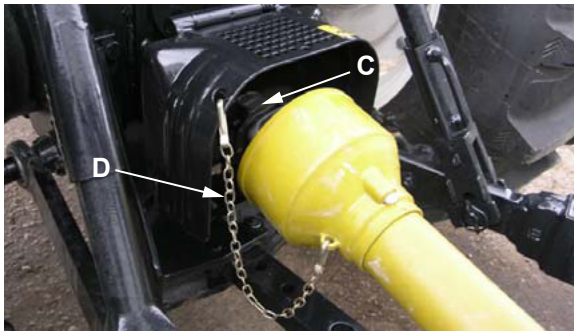

NOTICE

Prevent equipment damage.

Operation with pto shaft at a severe angle (over 17°) may result in equipment damage.

Adjust top link pto shaft is as straight as possible.

10. Position stump grinder so rotor is close to the ground.
11. Check swing frame to ensure that it is free from obstruction and can operate smoothly without binding.
12. Extend top link (E) until driveshaft goes straight into stump grinder rotor. It may be necessary to raise stump grinder to prevent rotor from contacting the ground.

    Adjusting top link so that the driveshaft is straight in the raised position will ensure that the driveshaft angle is acceptable (17° or less) when the rotor is lowered touching the ground in the extreme cutting position.

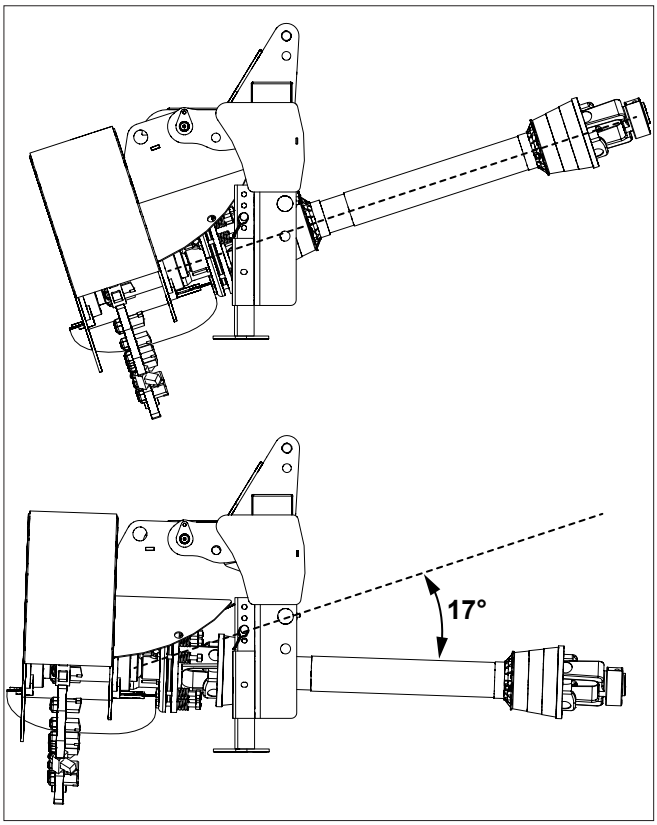

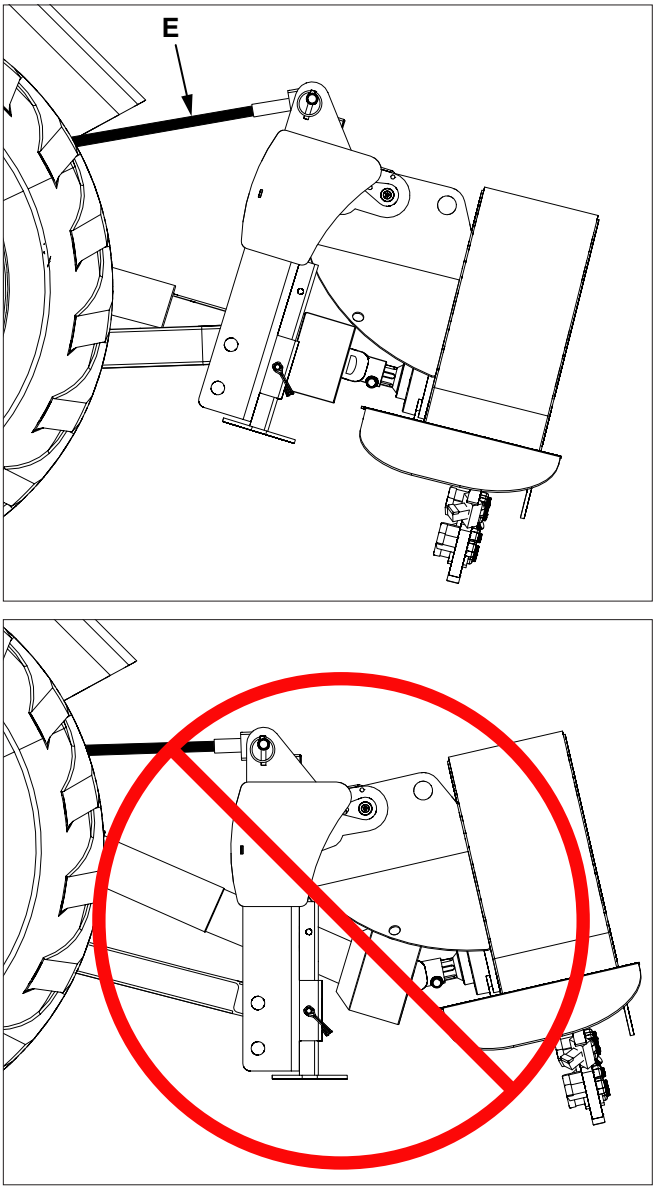

Driveshaft Angle Too Severe

NOTICE

Prevent equipment damage.

Driveshaft angle at more than 17° may result in a broken shaft on rotor.

If driveshaft angle is too severe, shaft on rotor may break off.

Broken Shaft From Severe Driveshaft Angle

5.5 Detach Stump Grinder From Tractor

WARNING

Prevent serious injury or death caused by unexpected movement:

1. **Park tractor on a level surface.**
2. **Engage tractor park brake.**
3. **Disengage PTO.**
4. **Shut off engine and remove key.**

1. Park tractor on a level surface.
2. Engage tractor park brake.
3. Lower grinder to the ground.
4. Shut off engine and remove key.
5. Lower parking stands and engage pins.
6. Disconnect safety shield chain (A).
7. Support driveshaft with your hand.
8. Pull collar (B) back toward grinder and slide shaft off tractor PTO.

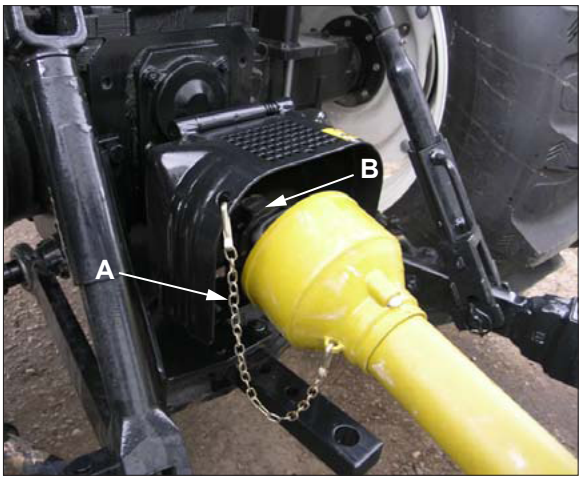

5.6 Transporting

1. Verify all reflectors and Slow Moving Vehicle (SMV) sign are visible.
2. Raise stump grinder to fully raised position.
3. Verify tractor PTO is disengaged.
4. Travel at a reasonable and safe speed.

WARNING

To prevent bodily injury from rotating cutting wheel, be sure to disengage PTO before transporting grinder.

5.7 Carbide Teeth Break-In

During the first few hours of use, avoid hitting stones as much as possible to allow the carbide teeth to wear slightly. This can be done by keeping the cutting wheel above ground level.

New carbide tips are razor sharp and can chip and shatter easily when they hit hard objects. Once the razor sharpness has worn away, the tips do not chip as easily. Observing these precautions will extend the life of the carbide teeth and reduce operating expenses.

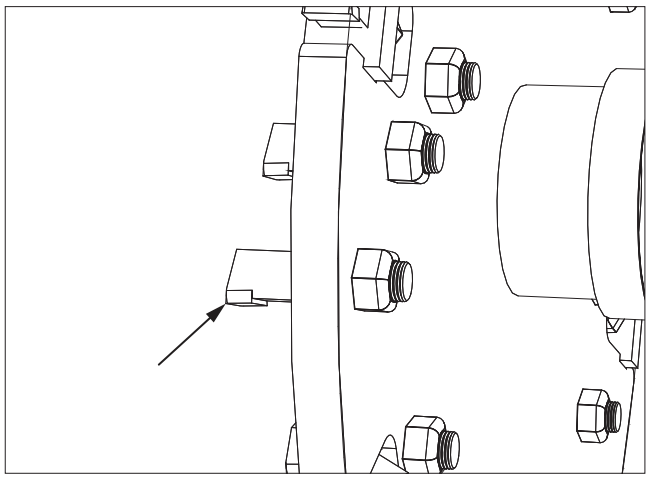

5.8 First Time User Tips

Before you begin, make sure the tractor is turned off and the PTO drive is disengaged.

Stand to the side of the stump grinder and observe the center point on the bottom of the cutting wheel. Now sit on the tractor seat and observe the center point again. This point will appear different depending on where you are positioned. This can be very deceiving! Familiarize yourself with the view of the stump grinder from the tractor seat.

Test all operating functions in an open area with the tractor at idle speed to get a feel for the controls. Take your time.

Start with a small stump. Make the first pass then disengage the PTO drive and get off the tractor to see how much you have removed.

Get off the tractor after each pass to check the progress. The cutting wheel is shielded from view when sitting on the tractor seat so it is difficult to accurately determine the progress. The ability to judge the positioning improves with practice. Do not expect to get the first stump done quickly.

⚠ WARNING

Always turn off the tractor and disengage the PTO drive before getting off the seat and approaching the cutting wheel.

⚠ WARNING

Drilling, sawing, sanding or machining wood products can expose you to wood dust, a substance known to the State of California to cause cancer.

Avoid inhaling wood dust or use a dust mask or other safeguards for personal protection. For more information go to www.P65Warnings.ca.gov/wood.

⚠ WARNING

Wear an approved dust mask or respirator.

Follow local, state and federal regulations.

5.9 Field Operation

WARNING

Entanglement in a rotating driveshaft can cause serious injury or death.

Keep tractor shields and driveshaft shields in place at all times. DO NOT operate without driveshaft guards.

DO NOT wear loose fitting clothing.

WARNING

Prevent serious injury or death caused by unexpected movement:

1. **Park tractor on a level surface.**
2. **Engage tractor park brake.**
3. **Disengage PTO.**
4. **Shut off engine and remove key.**

WARNING

Never operate stump grinder when other people are in the vicinity. Debris can be thrown several feet from cutting area. Keep all shields in place.

Do not allow riders on tractor.

WARNING

Drilling, sawing, sanding or machining wood products can expose you to wood dust, a substance known to the State of California to cause cancer.

Avoid inhaling wood dust or use a dust mask or other safeguards for personal protection. For more information go to www.P65Warnings.ca.gov/wood.

WARNING

Wear an approved dust mask or respirator.

Follow local, state and federal regulations.

1. Attach stump grinder to tractor. See Attach Stump Grinder To Tractor in this section.

Note: *All cutting is done on the front side of the cutting wheel, not the bottom of the wheel.*

If the stump is on a grade, position tractor lower on the grade with the cutting wheel on the stump grinder higher up the grade.

Below is an approximate cutting time for the stump shown in the image.

20 Hp tractor - 30 minutes
30 Hp tractor - 20 minutes
40 Hp tractor - 15 minutes

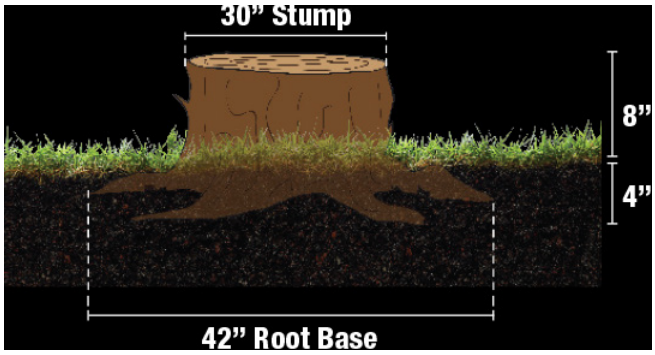

2. Back the tractor up to the rear edge of the stump (the edge that is farthest from the tractor).

   Start on the left side (as you sit on the tractor with your back to the stump). This allows the teeth to cut from the top down and work with the grain of the wood.

⚠ WARNING

Always turn off the tractor and disengage the PTO drive before getting off the seat and approaching the cutting wheel.

3. Disengage tractor PTO. Shut off engine and remove key.
4. Get off the seat and check the position of the stump grinder to the stump. Verify the grinder is positioned at the edge of the stump that is farthest away from tractor.
5. Engage cutting wheel and slowly lower it in a controlled manor to desired cutting depth. Always lower cutting wheel behind stump. Never try cutting down, always cut moving forward.
6. Slowly move into the stump.

   Operation should be smooth and grinding should be done gradually. If the stump grinder is jumping or bouncing off the stump, you are applying too much force. Applying too much force will shorten the life of the cutting teeth and may damage the stump grinder.

7. After a complete pass, move to home position and lower cutting wheel to desired position for next pass.
8. Continue lowering the passes in this manor until sump is completely removed. Continue to take passes across the front edge of the stump, taking 2 - 4 in. (51 - 102 mm) on each pass.

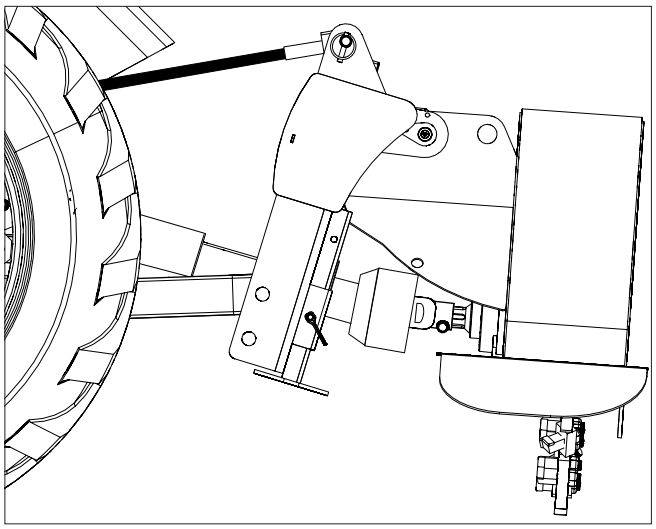

9. When ground level is reached, continue to grind 2 - 4 in. (51 - 102 mm) below the ground level to the bottom of the stump where the roots branch out.
10. Make multiple passes over the edge of the stump, taking 2 - 4 in. (51 - 102 mm) on each pass.
11. Reposition the tractor and stump grinder as needed until the entire stump has been removed to below ground level.
12. Follow the roots, taking as much of the larger surface roots as possible. If these are not removed they can, over time, protrude from the ground in areas where there is a heavy freeze/ thaw cycle.
13. Throttle down the tractor to an idle.
14. Disengage tractor PTO. Shut off engine and remove key.

⚠ WARNING

Never approach stump grinder before cutting wheel has come to a complete stop.

6 SERVICE AND MAINTENANCE

6.1 Maintenance

Maintenance Chart		
General Inspection	Inspect the unit for any buildup of contamination (dirt, stones, etc.).	Daily
Cutting Teeth	Check and replace one at a time as necessary. The teeth on the outer edge of the wheel wear faster and are more prone to chipping. With average daily use expect to replace 5 to 10 teeth per week. (See Replace Cutting Teeth in this section.)	Every 4 hours.
Cutting Wheel Retaining Nut	Tighten to 130-140 lb-ft. (176-190 Nm) of torque.	Only if cutting wheel is replaced.

⚠ DANGER

When servicing cutting wheel, it will be necessary to work under stump grinder. Be sure to support grinder frame with safety stands to prevent accidental lowering. Do not position stands under cutting wheel because it can rotate.

⚠ WARNING

Clean machine thoroughly before service or maintenance procedures.

The health effects from exposure to wood dust are due to chemicals in the wood or chemical substances in the wood created by bacteria, fungi, or molds.

⚠ WARNING

Prevent serious injury or death caused by unexpected movement:

1. **Park tractor on a level surface.**
2. **Engage tractor park brake.**
3. **Disengage PTO.**
4. **Shut off engine and remove key.**

We design many of our products using industry-standard parts that are widely available from local supply stores.

Many replacement parts such as bearings, belts, seals, touch-up paint and cutting teeth can often be found through local suppliers, not just from Baumalight.

6.2 Rotate Cutting Teeth - 1P14/1P34

It is recommended that the stump grinder is attached to the tractor when rotating teeth.

Check cutting teeth every 4 hours of use. Keep cutting teeth in good condition. Unit will cut faster and remaining teeth will last longer if broken or worn teeth are replaced.

Each tooth can be rotated up to two times before replacement is necessary.

1. Park skidsteer and stump grinder on a level surface.
2. Shut off engine.
3. Inspect teeth for wear on front edge (B). Once front edge is worn, rotate tooth so a new edge is on front (cutting) edge.
4. Loosen locknut (A) on tooth and rotate tooth 1/3 turn. Flat shoulder on tooth will fit against shoulder (C) on tooth holder.
5. Tighten locknut (A) to torque listed below.

H3000 Teeth - 35 lb/ft (47 Nm)
G3000 Teeth - 35 lb/ft (47 Nm)
W3000 Teeth - 25 lb/ft (34 Nm)

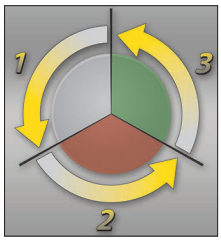

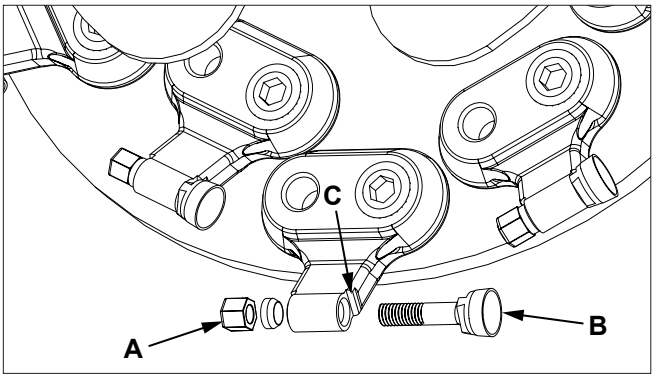

Note: *Parts breakdown can be found on Baumalight's website.* **www.baumalight.com**

6.3 Replace Cutting Teeth - 1P14/1P34

It is recommended that the stump grinder is attached to the tractor when replacing teeth.

1. Park skidsteer and stump grinder on a level surface.
2. Lower grinder to the ground.
3. Shut off engine and remove key.
4. Inspect cutting teeth (B) for damage and wear. Replace individual teeth as needed.
5. Remove locknut (A) and spacer from tooth (B). Install new tooth. Flat shoulder on tooth will fit against shoulder (C) on tooth holder.
6. Install spacer and locknut.
7. Tighten locknut (A) to torque listed below.

H3000 Teeth - 35 lb/ft (47 Nm)
G3000 Teeth - 35 lb/ft (47 Nm)
W3000 Teeth - 25 lb/ft (34 Nm)

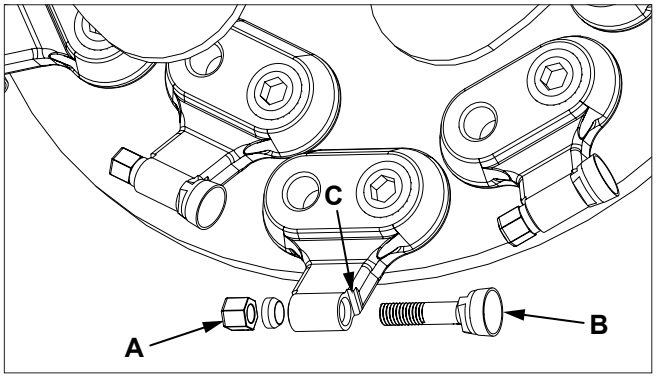

Note: *Parts breakdown can be found on Baumalight's website.* **www.baumalight.com**

6.4 Replace Tooth Holder - 1P14/1P34

It is recommended that the stump grinder is attached to the tractor when replacing tooth holder.

1. Park skidsteer and stump grinder on a level surface.
2. Shut off engine.
3. Inspect tooth holders (A) for damage and wear. Replace individual tooth holders as needed.
4. Remove tooth from tooth holder.
5. Remove mounting hardware on tooth holder. Install new tooth holder and tighten mounting hardware.
6. Install tooth into new tooth holder.
7. Tighten tooth locknut to torque listed below.

H3000 Teeth - 35 lb/ft (47 Nm)
G3000 Teeth - 35 lb/ft (47 Nm)
W3000 Teeth - 25 lb/ft (34 Nm)

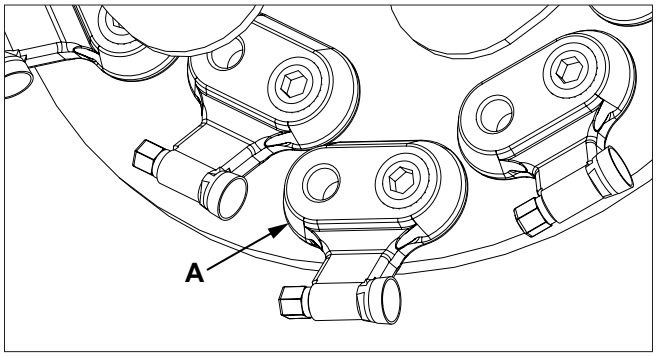

Note: *Parts breakdown can be found on Baumalight's website.* **www.baumalight.com**

6.5 Replace Cutting Teeth - 1P24

It is recommended that the stump grinder is attached to the tractor when replacing teeth.

1. Park tractor and grinder on a level surface.
2. Lower grinder to the ground.
3. Support grinder frame with safety stands.
4. Shut off engine and remove key.
5. Inspect cutting teeth for damage. Replace individual teeth as needed.

Note: *To loosen lock nut, use an impact wrench, or use two wrenches, one to hold the tooth and one to turn the lock nut.*

6. Remove lock nut (A) and cutting tooth (B).
7. Install replacement tooth and lock nut. Tighten lock nut (A) to 150 lb/ft (204 Nm) of torque.

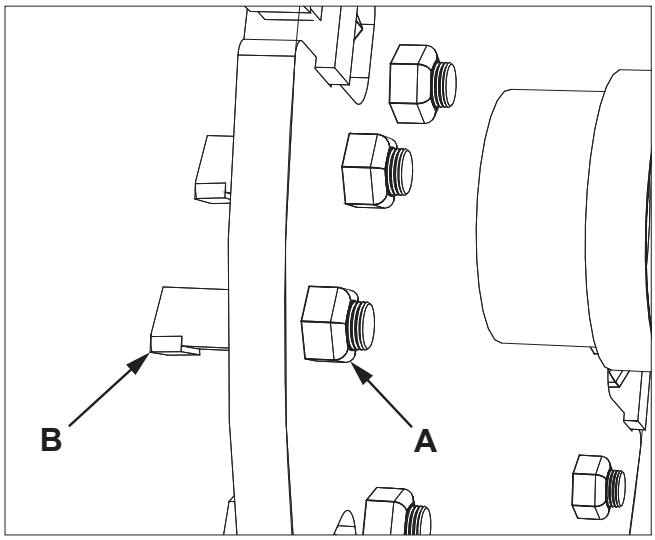

Note: *Parts breakdown can be found on Baumalight's website. www.baumalight.com*

6.6 Rotor Bearings

The bearings are factory lubricated with a lithium or lithium complex base grease which is suitable for most applications. Select a grease that is compatible with a lithium or lithium complex grease.

The bearings should contain as much grease as speed will permit. A full bearing with consequent slight leakage through the seal is the best protection against contaminant entry.

Extreme situations may require a change in lubricating periods as dictated by experience.

Generally, a lower quantity of grease at frequent intervals is more effective than a greater quantity at extended lubrication intervals.

Determine lubrication interval from chart below. Typical lubrication quantity is 1 pump from a standard grease gun.

Bearing Operation Temperature F° (C°)		**Interval**	
Over	Below		
-	158 (70)	1-2 Months	3-6 Weeks
158 (70)	212 (100)	2-4 Weeks	1-2 Weeks
212 (100)	-	1-7 Days	1-3 Days

6.7 Adjust Slip Clutch

⚠ WARNING

Entanglement in a rotating drive line can cause serious injury or death.

Disconnect and lockout power source before adjusting or servicing.

⚠ CAUTION

Slip clutch may be hot. Wait for clutch to cool before adjusting or servicing.

Binacchi Drivehafts

2-Disk 47 Hp 540 rpm
- OEM Part Number
  - B5N066USA60255
- Dimension A - 0.236 in. (6 mm)
- Dimension B - 1.1 in. (28 mm)

2-Disk 68 Hp 540 rpm
- OEM Part Number
  - B6140EA60255
  - B6N121USA60255
  - B6D121US255001
- Dimension A - 0.236 in. (6 mm)
- Dimension B - 1.1 in. (28 mm)

Comer Drivehafts

2-Disk 47 Hp 540 rpm
- OEM Part Number
  - T50-066P025027-W/GF
- Dimension A - 0.275 in. (7 mm)
- Dimension B - 1.280 in. (32.5 mm)

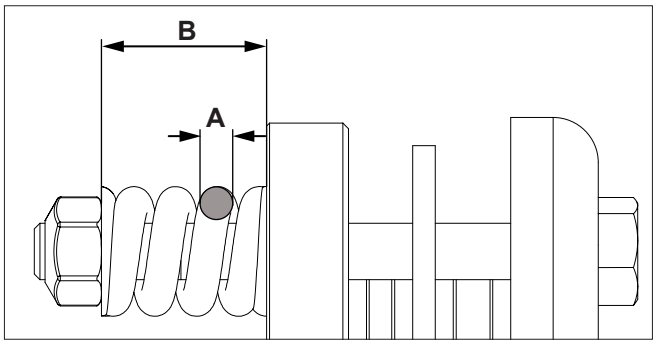

7 TROUBLESHOOTING

PROBLEM	CHECK	SOLUTION
Cutting wheel does not spin.	Cutting wheel jammed.	Remove material from cutting wheel.
	Shear bolt sheared off.	Replace shear bolt. ***NOTICE - Prevent equipment damage.*** ***Shear bolt is designed to fail to protect drive components from damage.*** ***Replace shear bolt with an M10 x 55mm grade 10.9 as specified by the driveshaft manufacturer.***
	Slip clutch is slipping.	Remove jam from cutting wheel.
	Rotor stub shaft broken. 	Check that driveshaft angle is not too severe (17° or less). See Section 5.4 Attach Stump Grinder To Tractor for more details. Replace stub shaft.
Shear bolt repeatedly fails.	Tractor HP	Tractor too large for stump grinder. ***NOTICE - Prevent equipment damage.*** ***Shear bolt is designed to fail to protect drive components from damage.*** ***Replace shear bolt with an M10 x 55mm grade 10.9 as specified by the driveshaft manufacturer.***
Tractor is not able to lift 3-point.	Tractor is too small.	Move link pins to the top position on the stump grinder to add leverage.
Cutting wheel cannot be lifted high enough.	Stump too tall.	Cut stump shorter. Shorten top link on 3-point hitch.
Cutting wheel cannot be lowered far enough.	Top link not correct length.	Lengthen top link on 3-point hitch.

PROBLEM	CHECK	SOLUTION
Cutting wheel does not have much power.	Tractor too small.	Verify tractor is properly sized for grinder.
	Slip clutch is slipping.	Check to determine if the slip clutch is hot. Use Caution: This Can Be Very Hot! A hot clutch does NOT grip. Slippage on the clutch occurs if there is more power than the unit is rated for. A bigger tractor can be used if it is idled down as this will decrease the output power of the engine. Take smaller passes (less cutting) to decrease the strain on the clutch. Turn the flow control knob to a lower number to reduce the strain on the slip clutch. Be careful when tightening the tension setting on the slip clutch as this could put excess strain on the gear box.

8 STORAGE

8.1 Storing Grinder

1. Store grinder in a dry place.
2. Clean grinder thoroughly. Dirt and wood chips will draw moisture and cause rust.
3. Lubricate machine. (See Service and Maintenance section.)
4. Check condition of cutting teeth. Replace as necessary. (See Service and Maintenance section.)
5. Check for loose or missing hardware.
6. Paint parts as necessary.
7. Store PTO driveshaft off the ground.

8.2 Remove From Storage

1. Review Operator's manual and check adjustments.
2. Lubricate machine. (See Service and Maintenance section.)
3. If parts have been replaced, verify they run properly.

8.2.1 Slip Clutch

⚠ WARNING

Entanglement in a rotating driveshaft can cause serious injury or death.

Disconnect and lockout power source before adjusting or servicing.

1. Disengage tractor PTO. Shut off engine and remove key.
2. Using a marker, scribe a line (A) across the exposed edges of the clutch plate and friction discs.
3. Loosen each compression nut (B) exactly two revolutions to free clutch friction discs.

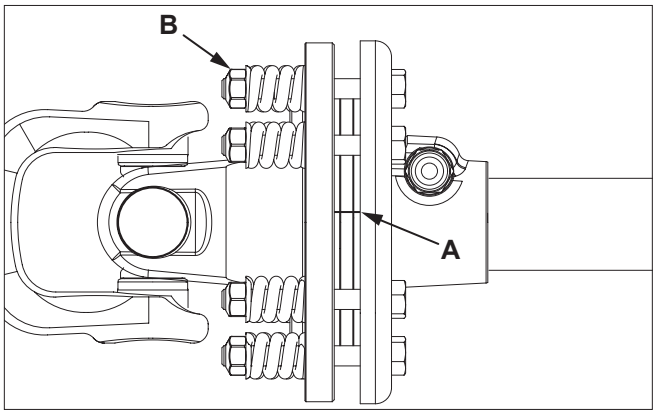

4. Start tractor and run driveshaft at a low idle to slip the friction discs. This will remove the dirt, corrosion and surface floss from clutch plate faces.
5. Disengage tractor PTO. Shut off engine and remove key.
6. Inspect the clutch and ensure that the scribed markings on the disc and plates have changed position. If any two marks are still aligned is an indication that these discs have not slipped. Repeat steps 4-5.
7. After ensuring all discs are free, tighten the compression nuts (B) uniformly, exactly two revolutions to resent the clutch to original pressure.

9 WARRANTY

To view the warranty, scan the QR Code below, or go to Baumalight.com. From the Support drop down, click on Support, then select Stump Grinders. Select Product Warranty.

MTB MFG INC.
CORPORATE HEADQUARTERS
4575 Powell Rd.,
Wallenstein, Ontario Canada
N0B 2S0
www.baumalight.com